| Blackmer www.blackmer.com | TYPE | SIZE | UNIT STYLE | DIMENSIONS 104-143 |
|---|---|---|---|---|
| | SX | 3A | PO | Section 104<br>Effective October 2006<br>Replaces NEW<br>Page 1/3 |

RIGHT HAND ROTATION. FOR LEFT HAND ROTATION SHAFT PROJECTION IS OPPOSITE THAT SHOWN.

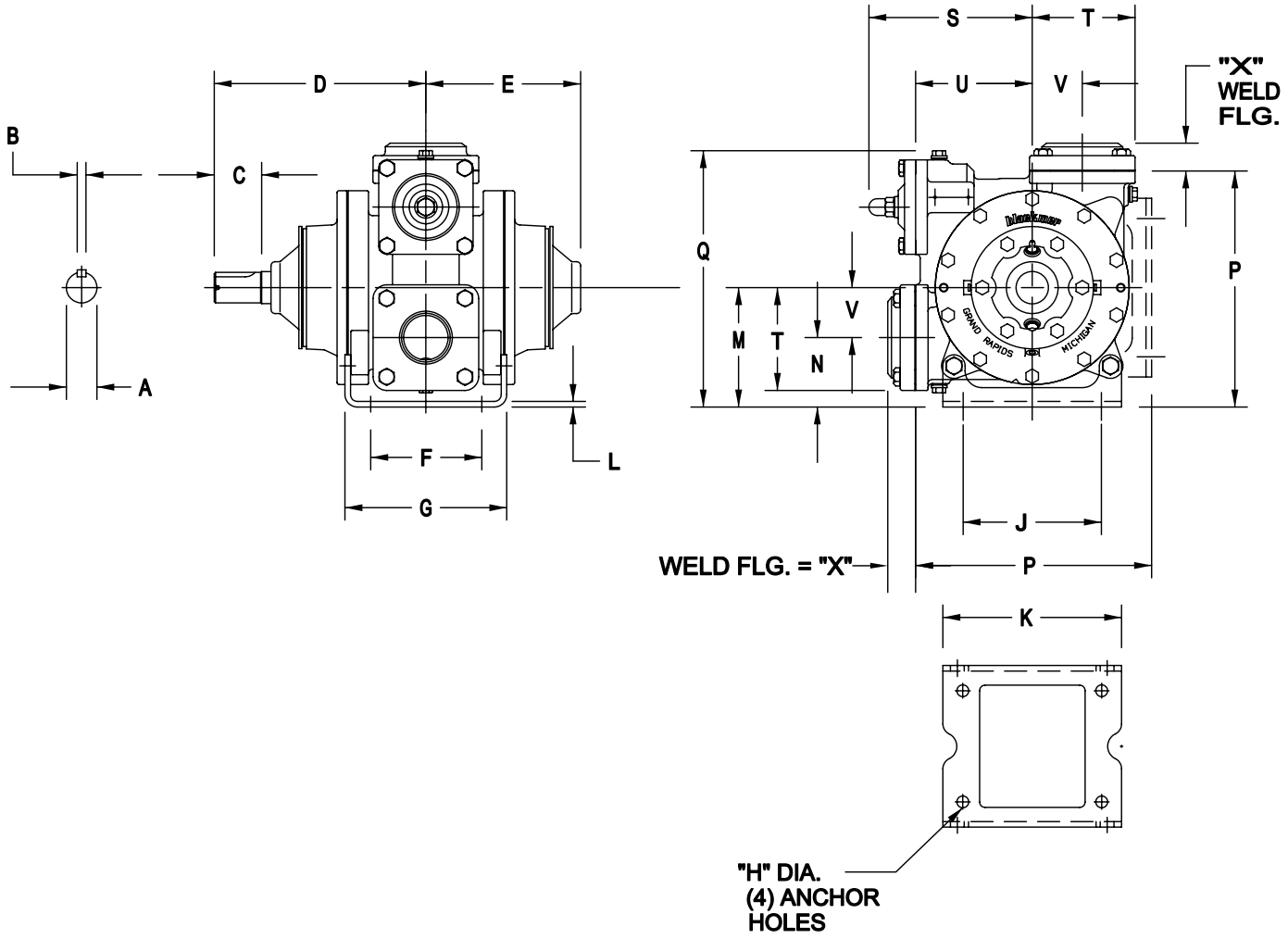


| MOTOR FRAME SIZE | | | UNITS | DIMENSIONS A | B | C | D | E | F | G | H | J | K |
|---|---|---|---|---|---|---|---|---|---|---|---|---|---|
| | | | IN | 1.375 | .393 | 2.14 | 9.53 | 7.00 | 5.00 | 7.28 | Ø.53 | 6.25 | 8.04 |
| | | | MM | 35 | 10 | 54,4 | 241,9 | 177,8 | 127 | 184,9 | 13,5 | 158,8 | 204,2 |
| | | | | L | M | N | P | Q | R | S | T | U | V |
| | | | IN | .25 | 5.38 | 3.12 | 10.62 | 11.56 | — | 8.00 | 4.63 | 5.25 | 2.25 |
| | | | MM | 6,4 | 136,7 | 79,3 | 269,7 | 293,7 | — | 203,2 | 117,6 | 133,4 | 57,2 |
| | | | | W | X | Y | Z | AA | BB | CC | DD | EE | FF |
| | | | IN | — | 1.25 | 1.25 | .313 | — | — | — | — | — | — |
| | | | MM | — | 31,8 | 31,8 | 7,9 | — | — | — | — | — | — |
| | | | | WEIGHT | | | | | | | | | |
| | | | LBS | 132 | | | | | | | | | |
| | | | KG | 60 | | | | | | | | | |

| Blackmer Part of Pump Solutions Group A DOVER COMPANY www.blackmer.com | TYPE | SIZE | UNIT STYLE | DIMENSIONS 104-143 | |
|---|---|---|---|---|---|
| | SX | 3A | HRA | Section<br>Effective<br>Replaces<br>Page 2/3 | 104<br>October 2006<br>NEW |

RIGHT HAND ROTATION.

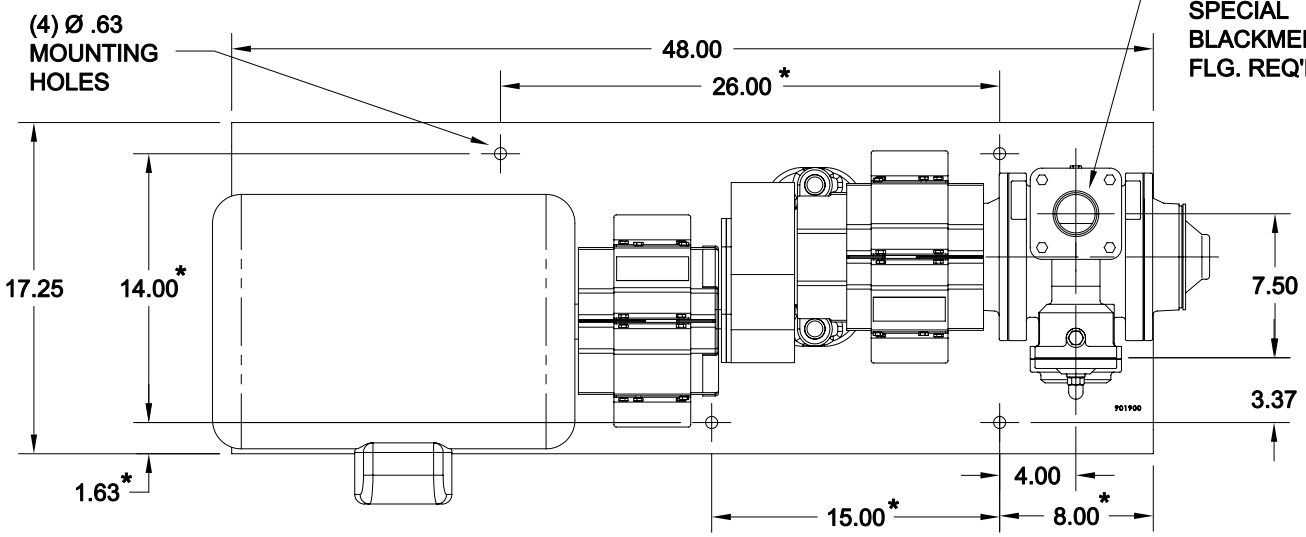


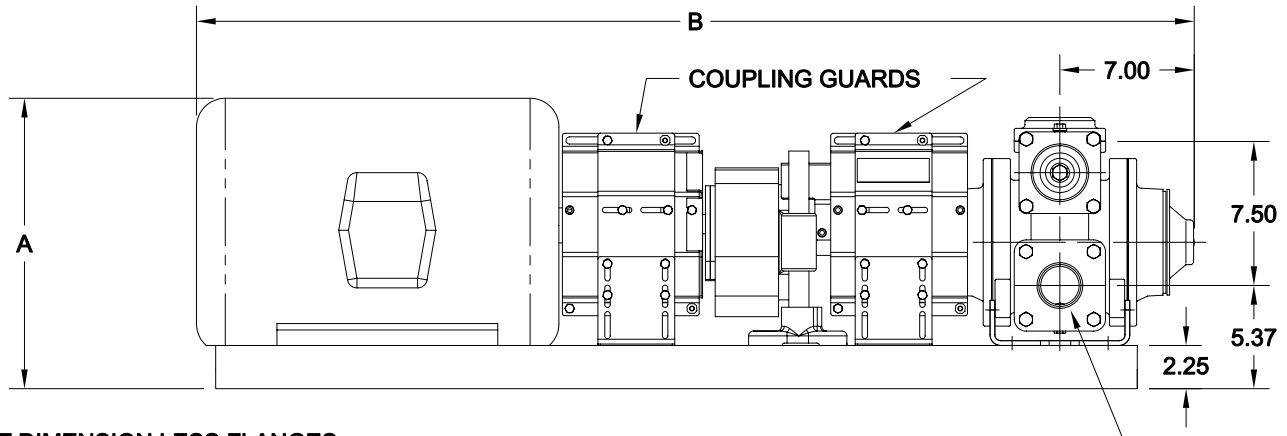


UNIT DIMENSION LESS FLANGES
* TOLERANCE ± .13
TOLERANCE AN ALL OTHER DIMENSIONS ± .25
"A" DIMENSION LESS EYEBOLT

FLANGE HT: 3" WELD - 1.25"

| MOTOR | | UNITS | DIMENSIONS | | | | | | | | | |
|---|---|---|---|---|---|---|---|---|---|---|---|---|
| FRAME SIZE | BASE | | A | B | | | | | | | | |
| 182T | 901900 | IN | 11.88 | 45 | | | | | | | | |
| 184T | 901900 | IN | 11.88 | 45 | | | | | | | | |
| 213T | 901900 | IN | 13.68 | 47.88 | | | | | | | | |
| 215T | 901900 | IN | 13.68 | 47.88 | | | | | | | | |
| 254T | 901900 | IN | 15.13 | 52 | | | | | | | | |
| 256T | 901900 | IN | 15.13 | 52 | | | | | | | | |

| TYPE | SIZE | UNIT STYLE |
|---|---|---|
| SX | 3A | HRA |

DIMENSIONS 104-143

| | |
|---|---|
| Section | 104 |
| Effective | October 2006 |
| Replaces | NEW |
| Page 3/3 | |

www.blackmer.com

LEFT HAND ROTATION.

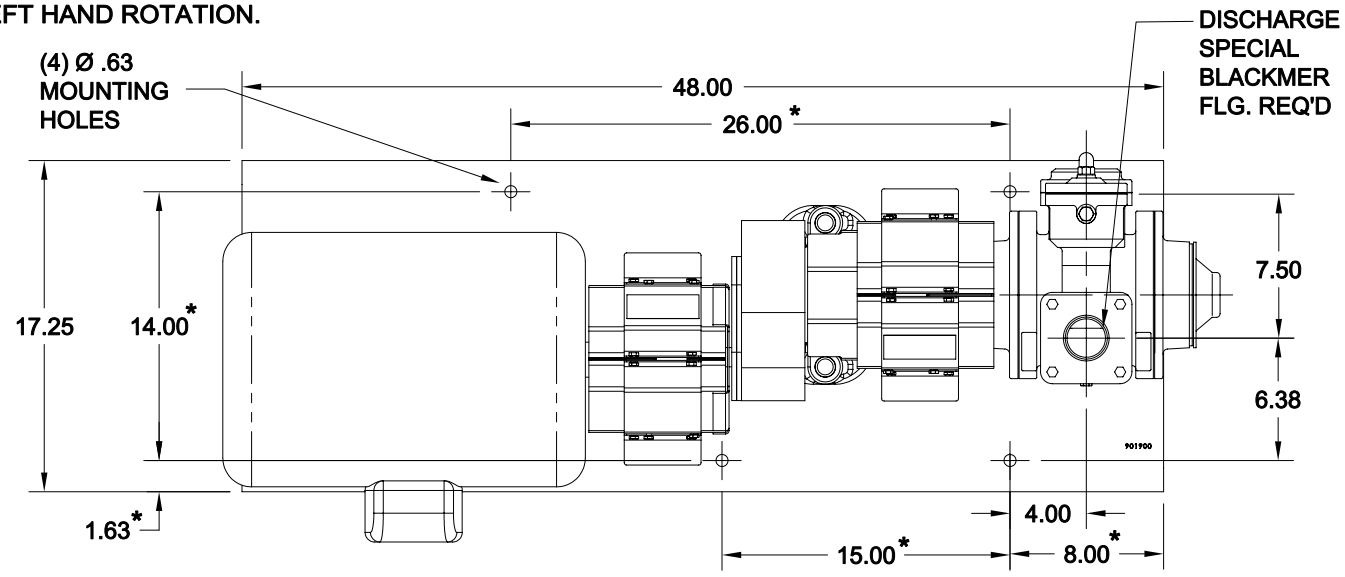


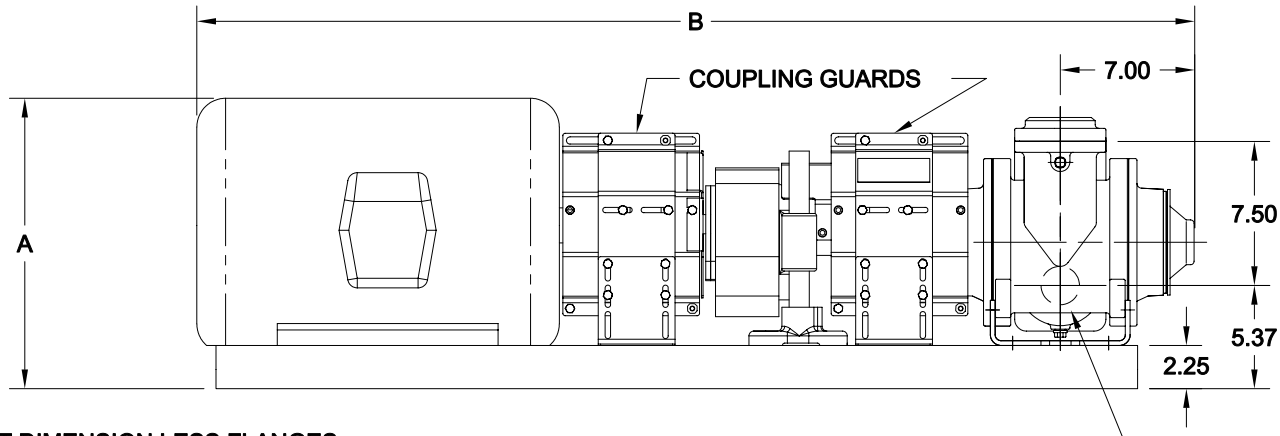


UNIT DIMENSION LESS FLANGES
* TOLERANCE ± .13
TOLERANCE AN ALL OTHER DIMENSIONS ± .25
"A" DIMENSION LESS EYEBOLT

FLANGE HT: 3" WELD - 1.25"

| MOTOR | | UNITS | DIMENSIONS | | | | | | | | | |
|---|---|---|---|---|---|---|---|---|---|---|---|---|
| FRAME SIZE | BASE | | A | B | | | | | | | | |
| 182T | 901900 | IN | 11.88 | 45 | | | | | | | | |
| 184T | 901900 | IN | 11.88 | 45 | | | | | | | | |
| 213T | 901900 | IN | 13.68 | 47.88 | | | | | | | | |
| 215T | 901900 | IN | 13.68 | 47.88 | | | | | | | | |
| 254T | 901900 | IN | 15.13 | 52 | | | | | | | | |
| 256T | 901900 | IN | 15.13 | 52 | | | | | | | | |