	TYPE	SIZE	UNIT STYLE	DIMENSIONS 105-103	
www.blackmer.com	XLW	2F	PO	Section Effective Replaces Page 1 / 11	105 SEPTEMBER 2023 JUNE 2018

RIGHT HAND ROTATION. FOR LEFT HAND ROTATION, SHAFT PROJECTION IS OPPOSITE THAT SHOWN.

*TOLERANCE ± 1/8"

TOLERANCE ON OTHER DIMENSIONS ± 1/4"

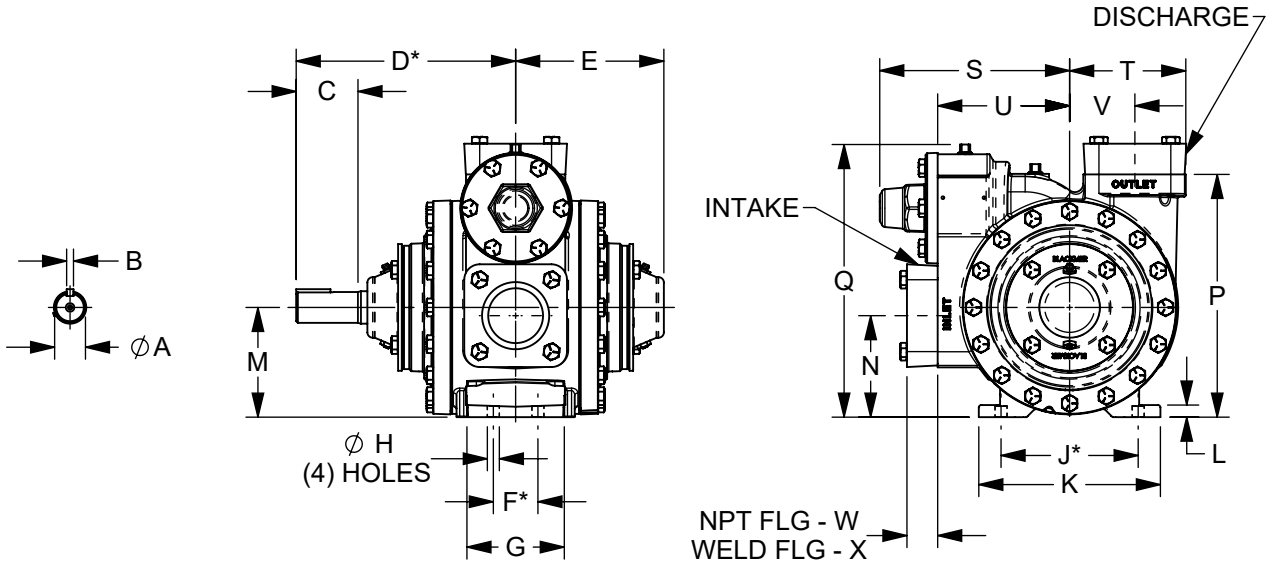

DIMENSIONS											WEIGHTS	
UNITS	A	B	C	D	E	F	G	H	J	K	UNITS	PUMP ONLY
IN	1 1/8	1/4	2 1/4	8	5 7/16	1 5/8	3 5/8	7/16	5	6 1/2	LBS	79
MM	28,6	6,4	57,2	203,2	138,1	41,3	92,1	11,1	127	165,1	KG	36
	L	M	N	P	Q	R	S	T	U	V		WITH NPT FLANGES
IN	7/16	4	3 3/4	8 7/8	10	---	6 7/8	4 3/16	4 13/16	2 3/8	LBS	84
MM	11,1	101,6	95,3	225,4	254	---	174,6	106,4	122,2	60,3	KG	38
	W	X	Y	Z	AA	BB	CC	DD	EE	FF		WITH WELD FLANGES
IN	1 1/8	1 3/16	---	---	---	---	---	---	---	---	LBS	84
MM	28,6	30,2	---	---	---	---	---	---	---	---	KG	38
	GG	HH	JJ	KK	LL	MM						ANSI FLANGES
IN	---	---	---	---	---	---					LBS	98
MM	---	---	---	---	---	---					KG	44

Blackmer www.blackmer.com	TYPE	SIZE	UNIT STYLE	DIMENSIONS 105-103	
	XLW	2F	SK571	Section Effective Replaces Page 2 / 11	105 SEPTEMBER 2023 NEW

RIGHT HAND ROTATION SHOWN.

*TOLERANCE ± 1/8"

TOLERANCE ON OTHER DIMENSIONS ± 1/4"

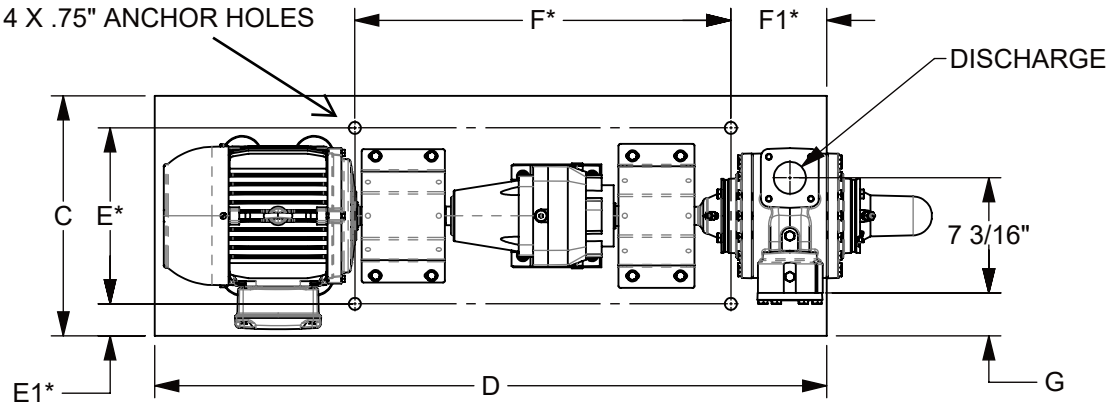

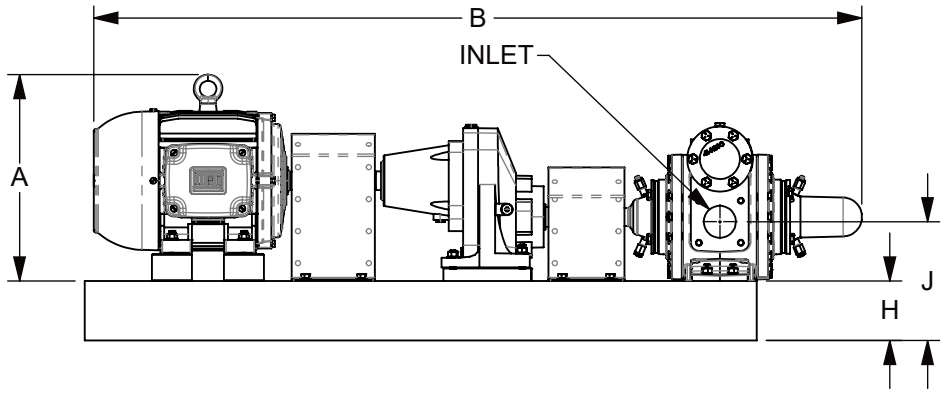

"A" DIMENSION LESS MOTOR EYEBOLT

MOTOR			BASE NO.	DIMENSIONS											APPROX. UNIT WT. - POUNDS	
FRAME SIZE	H.P.	RPM		A	B	C	D	E	E1	F	F1	G	H	J	LESS MOTOR	INCL MOTOR
182T	3	1800	901457	12 7/8	48	15	42	11	2	23 1/2	6	2 11/16	3 3/4	7 7/16	350	440
184T	5	1800	901457	12 7/8	49	15	42	11	2	23 1/2	6	2 11/16	3 3/4	7 7/16	350	450
213T	7 1/2	1800	901459	13 5/8	51 1/8	18	46	14	2	24	8	4 1/4	4 1/4	7 7/8	400	550
215T	10	1800	901459	15 5/8	52 5/8	18	46	14	2	24	8	4 1/4	4 1/4	7 7/8	400	555
---	---	---	---	---	---	---	---	---	---	---	---	---	---	---	---	---
---	---	---	---	---	---	---	---	---	---	---	---	---	---	---	---	---
---	---	---	---	---	---	---	---	---	---	---	---	---	---	---	---	---
---	---	---	---	---	---	---	---	---	---	---	---	---	---	---	---	---

Blackmer www.blackmer.com	TYPE	SIZE	UNIT STYLE	DIMENSIONS 105-103	
	XLW	2F	N15	Section Effective Replaces Page 3 / 11	105 SEPTEMBER 2023 JUNE 2018

RIGHT HAND ROTATION. FOR LEFT HAND ROTATION, SHAFT PROJECTION IS OPPOSITE THAT SHOWN.

XLW2F WITH N15 GEARBOX OPTION SHOWN.

*TOLERANCE ± 1/8"

TOLERANCE ON OTHER DIMENSIONS ± 1/4"

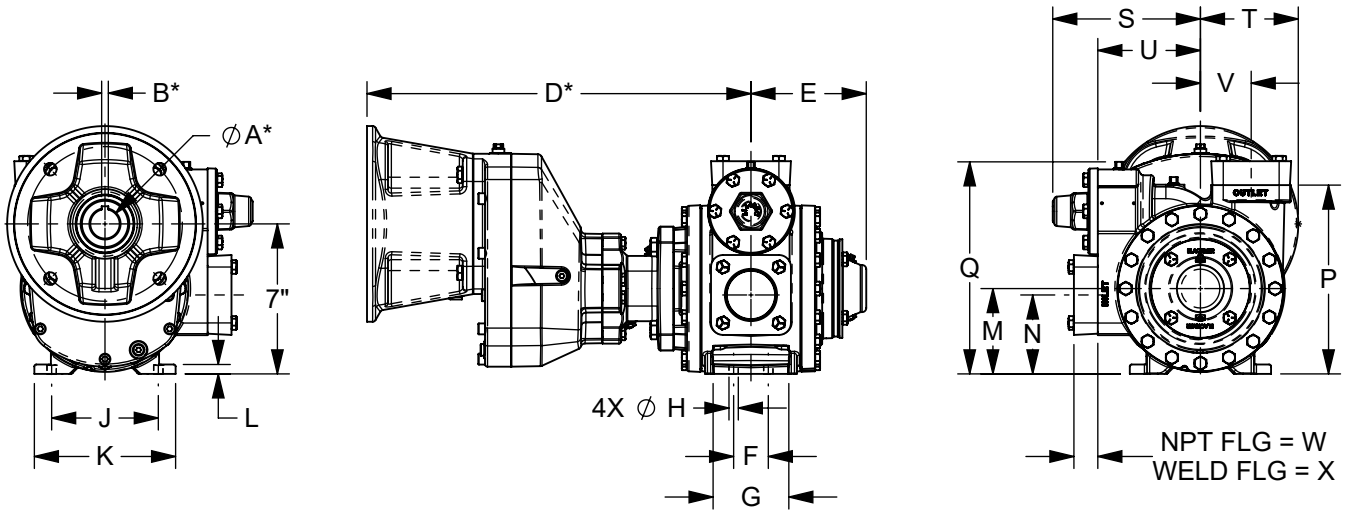

MOTOR SIZE	∅A*	B*	D*
NEMA 140TC	7/8	3/16	16 15/16
NEMA 180TC	1 1/8	1/4	17 1/4
NEMA 210TC	1 3/8	5/16	18
IEC 100/112 B5	28mm	8mm	21 5/16

DIMENSIONS											WEIGHTS	
UNITS	A	B	C	D	E	F	G	H	J	K	UNITS	PUMP ONLY
IN	---	---	---	---	5 7/16	1 5/8	3 5/8	7/16	5	6 1/2	LBS	85
MM	---	---	---	---	138,1	41,3	92,1	11,1	127	165,1	KG	39
	L	M	N	P	Q	R	S	T	U	V		NPT FLANGES
IN	7/16	4	3 3/4	8 7/8	10	---	6 7/8	4 3/16	4 13/16	2 3/8	LBS	90
MM	11,1	101,6	85,7	225,4	254	---	174,6	106,4	122,2	60,3	KG	41
	W	X	Y	Z	AA	BB	CC	DD	EE	FF		WELD FLANGES
IN	1 1/8	1 3/16	---	---	---	---	---	---	---	---	LBS	90
MM	28,6	30,2	---	---	---	---	---	---	---	---	KG	41
	GG	HH	JJ	KK	LL	MM						ANSI FLANGES
IN	---	---	---	---	---	---					LBS	104
MM	---	---	---	---	---	---					KG	47

Blackmer www.blackmer.com	TYPE	SIZE	UNIT STYLE	DIMENSIONS 105-103	
	XLW	2F	HROF	Section Effective Replaces Page 4 / 11	105 SEPTEMBER 2023 JUNE 2018

RIGHT HAND ROTATION SHOWN.

*TOLERANCE ± 1/8"

TOLERANCE ON OTHER DIMENSIONS ± 1/4"

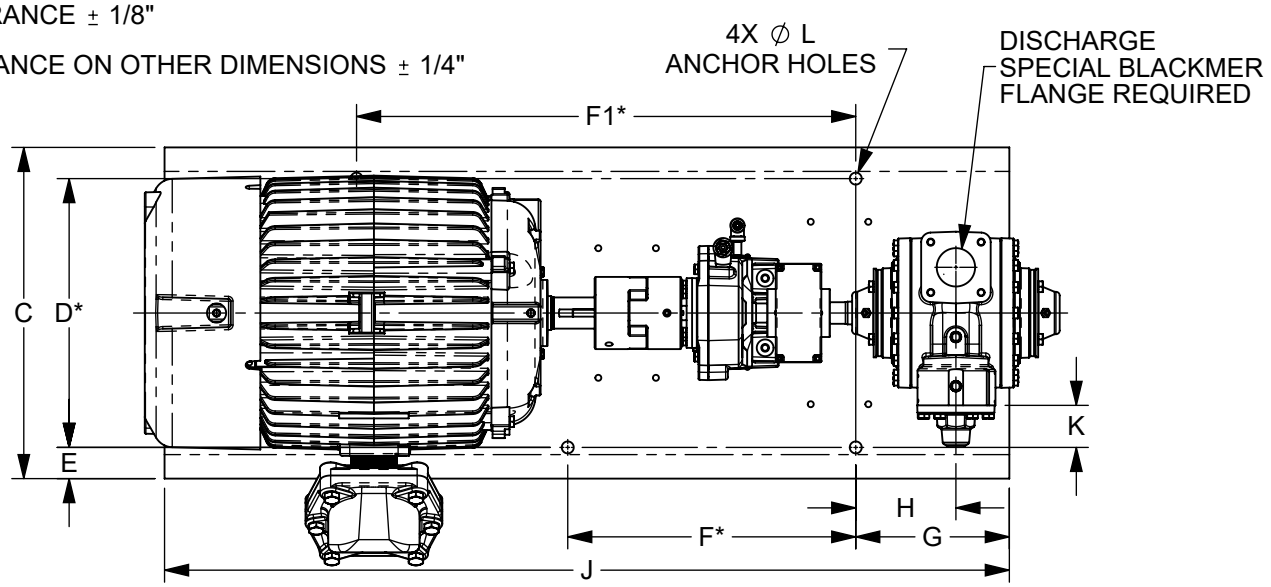

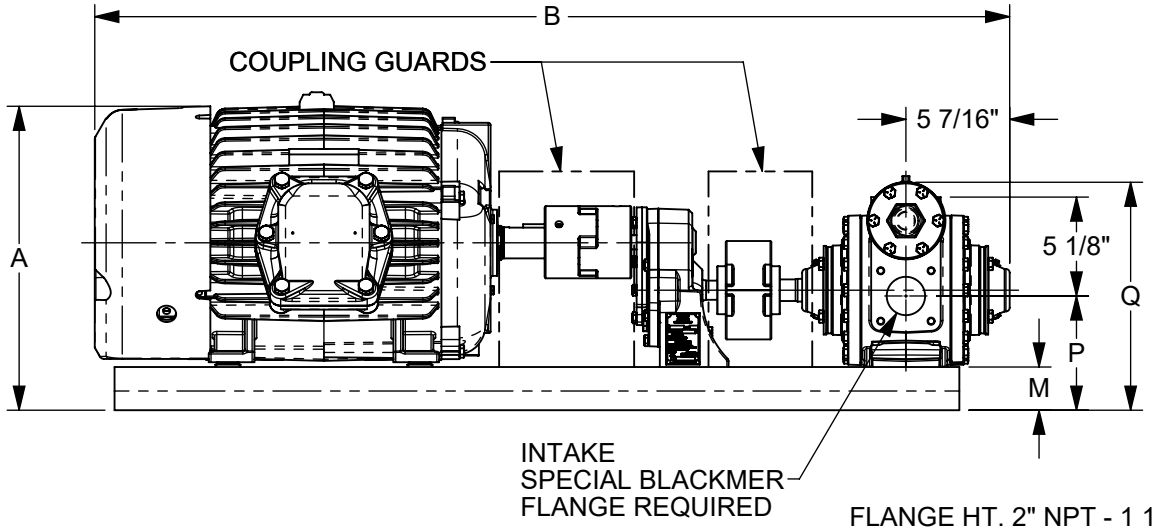

"A" DIMENSION LESS MOTOR EYEBOLT

FLANGE HT. 2" NPT - 1 1/8"
2" WELD - 1 3/16"

MOTOR			BASE NO.	DIMENSIONS															APPROX. UNIT WT. - POUNDS	
FRAME SIZE	H.P.	RPM		A	B	C	D	E	F	F1	G	H	J	K	L	M	P	Q	LESS MOTOR	INCL MOTOR
143T	1	1800	901790	12 1/4	36 5/8	14 3/4	10	2 3/8	12	12	6	3 1/4	33	1/4	7/16	1 3/4	5 1/2	12 1/8	140	211
145T	1 1/2	1800	901790	12 1/4	37 1/2	14 3/4	10	2 3/8	12	12	6	3 1/4	33	1/4	7/16	1 3/4	5 1/2	12 1/8	140	216
182T	3	1800	901790	13 3/8	38 1/2	14 3/4	10	2 3/8	12	12	6	3 1/4	33	1/4	7/16	1 3/4	5 1/2	12 1/8	142	254
184T	5	1800	901790	13 3/8	39 7/8	14 3/4	10	2 3/8	12	12	6	3 1/4	33	1/4	7/16	1 3/4	5 1/2	12 1/8	142	308
213T	7 1/2	1800	901791	14 5/8	47 1/2	17 1/4	14	1 5/8	15	26	8	5 1/4	44	2 1/4	5/8	2 1/4	6	12 5/8	151	406
215T	10	1800	901791	14 5/8	47 1/2	17 1/4	14	1 5/8	15	26	8	5 1/4	44	2 1/4	5/8	2 1/4	6	12 5/8	151	439
254T	15	1800	901791	15 7/8	47 1/2	17 1/4	14	1 5/8	15	26	8	5 1/4	44	2 1/4	5/8	2 1/4	6	12 5/8	152	537
256T	20	1800	901791	15 7/8	48 3/4	17 1/4	14	1 5/8	15	26	8	5 1/4	44	2 1/4	5/8	2 1/4	6	12 5/8	152	561

Blackmer www.blackmer.com	TYPE	SIZE	UNIT STYLE	DIMENSIONS 105-103	
	XLW	2F	HROF	Section Effective Replaces Page 5 / 11	105 SEPTEMBER 2023 JUNE 2018

LEFT HAND ROTATION SHOWN.

*TOLERANCE ± 1/8"

TOLERANCE ON OTHER DIMENSIONS ± 1/4"

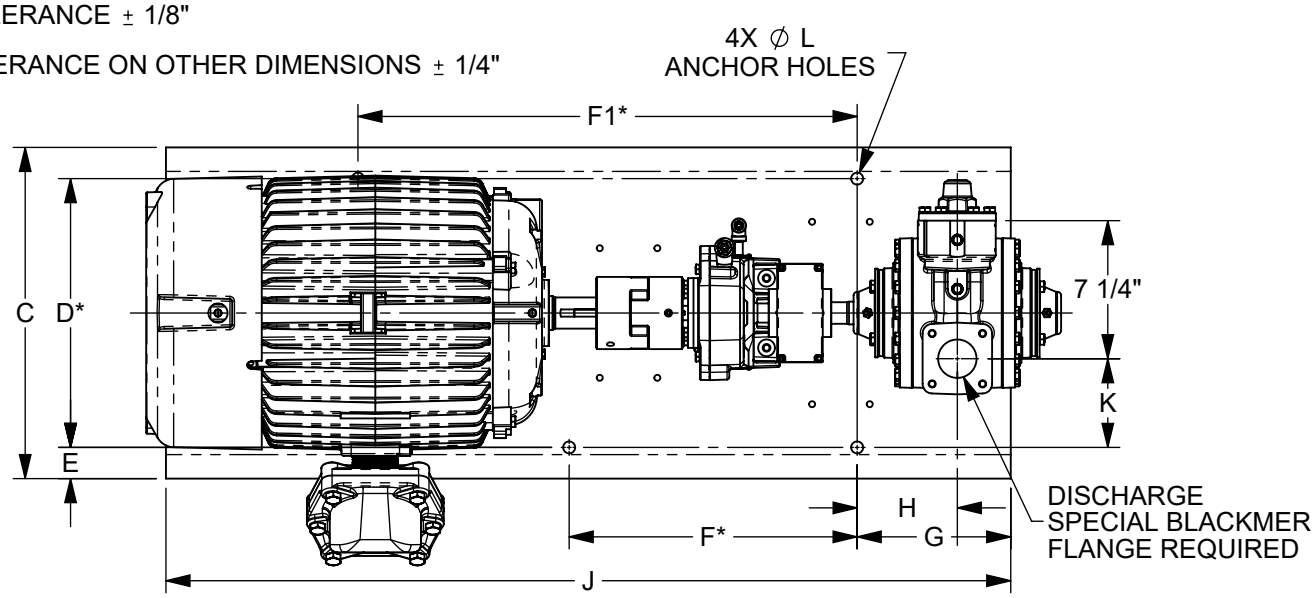

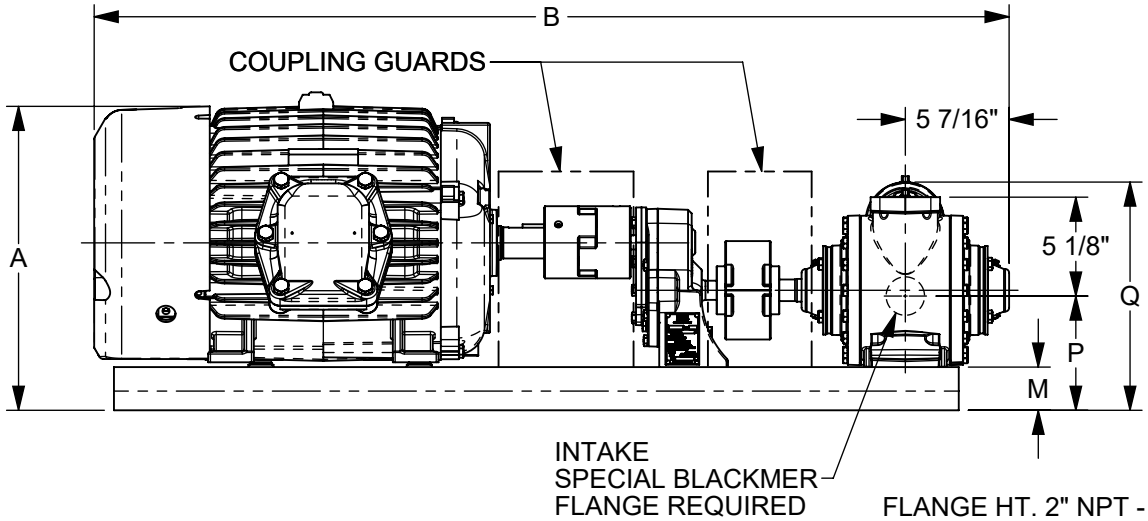

"A" DIMENSION LESS MOTOR EYEBOLT

FLANGE HT. 2" NPT - 1 1/8"
2" WELD - 1 3/16"

MOTOR			BASE NO.	DIMENSIONS															APPROX. UNIT WT. - POUNDS	
FRAME SIZE	H.P.	RPM		A	B	C	D	E	F	F1	G	H	J	K	L	M	P	Q	LESS MOTOR	INCL MOTOR
143T	1	1800	901790	12 1/4	36 5/8	14 3/4	10	2 3/8	12	12	6	3 1/4	33	2 5/8	7/16	1 3/4	5 1/2	12 1/8	140	211
145T	1 1/2	1800	901790	12 1/4	37 1/2	14 3/4	10	2 3/8	12	12	6	3 1/4	33	2 5/8	7/16	1 3/4	5 1/2	12 1/8	140	216
182T	3	1800	901790	13 3/8	38 1/2	14 3/4	10	2 3/8	12	12	6	3 1/4	33	2 5/8	7/16	1 3/4	5 1/2	12 1/8	142	254
184T	5	1800	901790	13 3/8	39 7/8	14 3/4	10	2 3/8	12	12	6	3 1/4	33	2 5/8	7/16	1 3/4	5 1/2	12 1/8	142	308
213T	7 1/2	1800	901791	14 5/8	47 1/2	17 1/4	14	1 5/8	15	26	8	5 1/4	44	4 5/8	5/8	2 1/4	6	12 5/8	151	406
215T	10	1800	901791	14 5/8	47 1/2	17 1/4	14	1 5/8	15	26	8	5 1/4	44	4 5/8	5/8	2 1/4	6	12 5/8	151	439
254T	15	1800	901791	15 7/8	47 1/2	17 1/4	14	1 5/8	15	26	8	5 1/4	44	4 5/8	5/8	2 1/4	6	12 5/8	152	537
256T	20	1800	901791	15 7/8	48 3/4	17 1/4	14	1 5/8	15	26	8	5 1/4	44	4 5/8	5/8	2 1/4	6	12 5/8	152	561

Blackmer www.blackmer.com	TYPE	SIZE	UNIT STYLE	DIMENSIONS 105-103	
	XLW	2F	HRA	Section Effective Replaces Page 6 / 11	105 SEPTEMBER 2023 JUNE 2018

RIGHT HAND ROTATION SHOWN.

*TOLERANCE ± 1/8"

TOLERANCE ON OTHER DIMENSIONS ± 1/4"

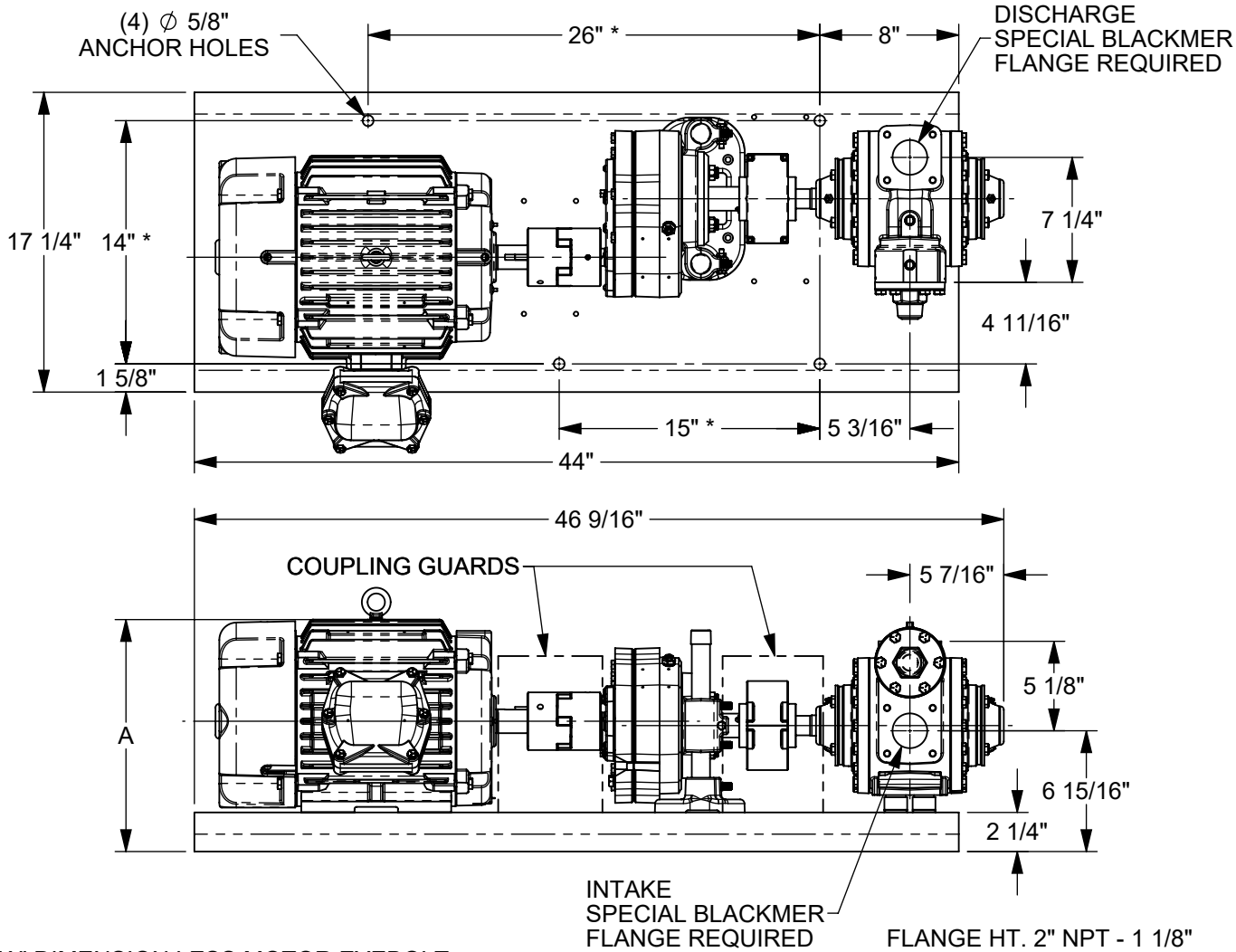

"A" DIMENSION LESS MOTOR EYEBOLT

FLANGE HT. 2" NPT - 1 1/8"
2" WELD - 1 3/16"

MOTOR			BASE NO.	DIMENSIONS									APPROX. UNIT WT. - POUNDS	
FRAME SIZE	H.P.	RPM		A									LESS MOTOR	INCL MOTOR
182T	3	1800	901776	11 13/16									281	420
184T	5	1800	901776	11 13/16									281	486
213T	7 1/2	1800	901776	13 3/8									291	521
215T	10	1800	901776	13 3/8									291	511

Blackmer www.blackmer.com	TYPE	SIZE	UNIT STYLE	DIMENSIONS 105-103	
	XLW	2F	HRA	Section Effective Replaces Page 7 / 11	105 SEPTEMBER 2023 JUNE 2018

LEFT HAND ROTATION SHOWN.

*TOLERANCE ± 1/8"

TOLERANCE ON OTHER DIMENSIONS ± 1/4"

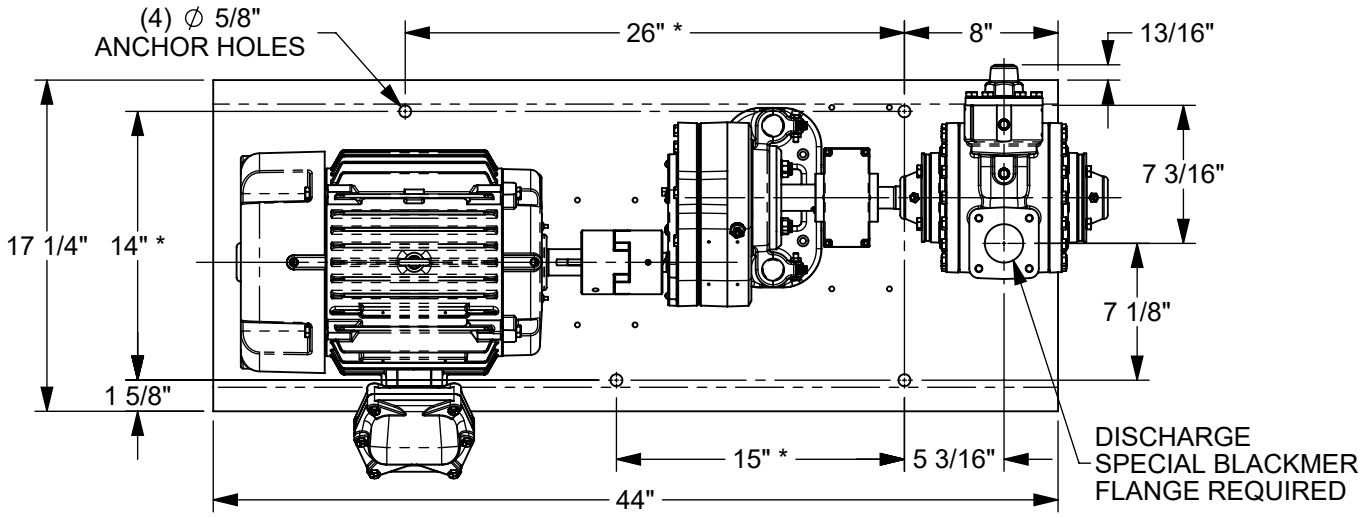

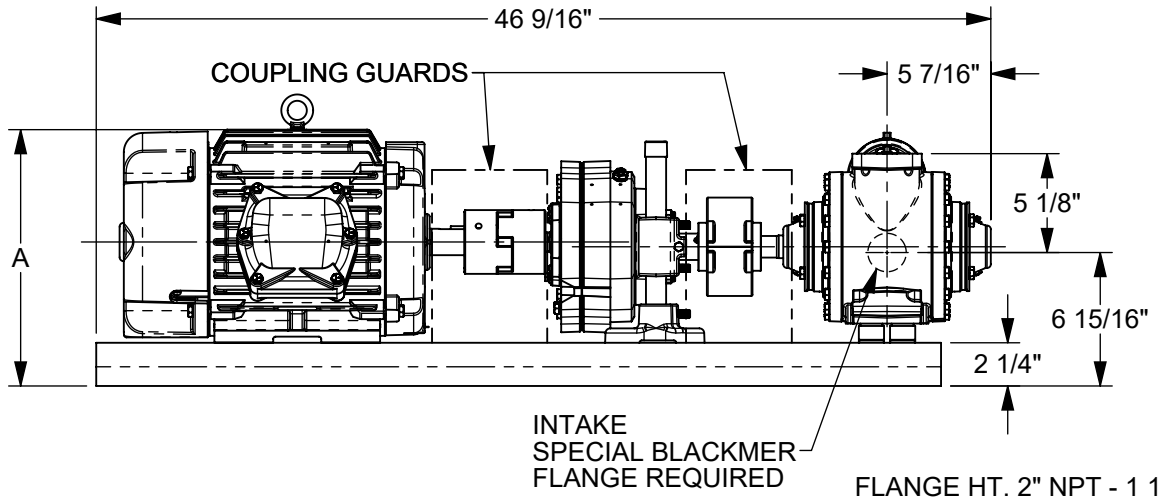

FLANGE HT. 2" NPT - 1 1/8"
2" WELD - 1 3/16"

"A" DIMENSION LESS MOTOR EYEBOLT

MOTOR			BASE NO.	DIMENSIONS									APPROX. UNIT WT. - POUNDS	
FRAME SIZE	H.P.	RPM		A									LESS MOTOR	INCL MOTOR
182T	3	1800	901776	11 13/16									281	420
184T	5	1800	901776	11 13/16									281	486
213T	7 1/2	1800	901776	13 3/8									291	521
215T	10	1800	901776	13 3/8									291	511

Blackmer www.blackmer.com	TYPE	SIZE	UNIT STYLE	DIMENSIONS 105-103	
	XLW	2F	HRB	Section Effective Replaces Page 8 / 11	105 SEPTEMBER 2023 JUNE 2018

RIGHT HAND ROTATION SHOWN.

*TOLERANCE ± 1/8"

TOLERANCE ON OTHER DIMENSIONS ± 1/4"

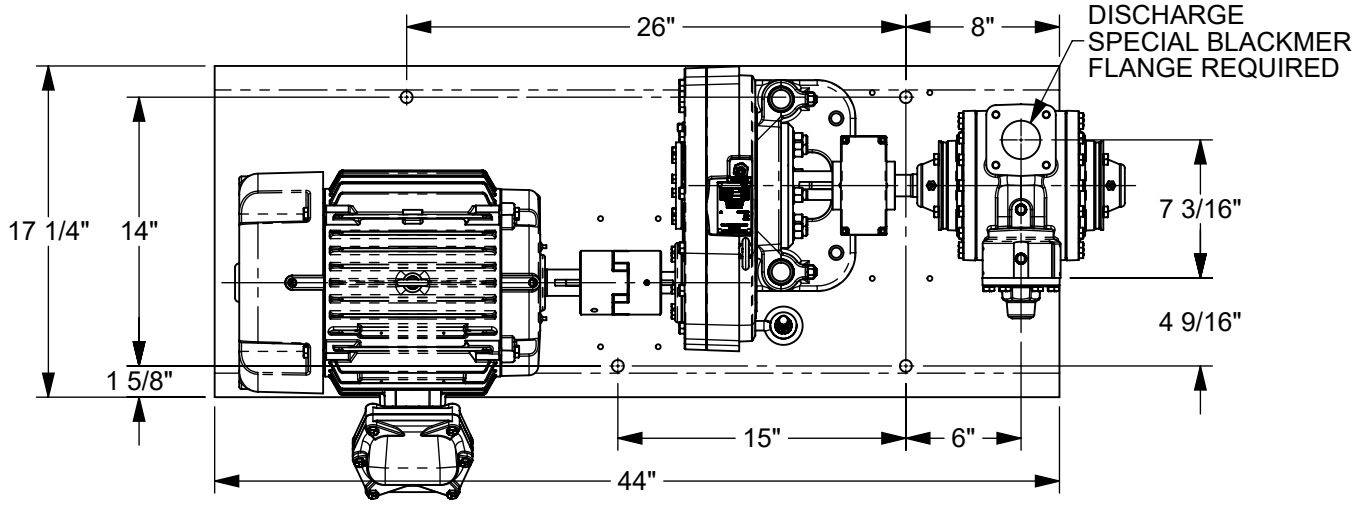

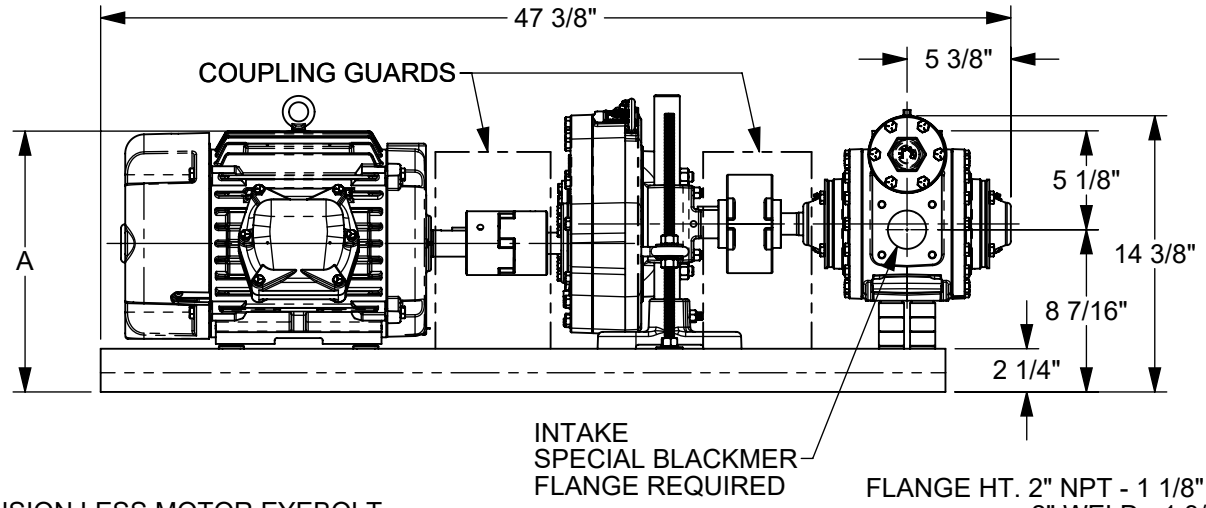

"A" DIMENSION LESS MOTOR EYEBOLT

FLANGE HT. 2" NPT - 1 1/8"
2" WELD - 1 3/16"

MOTOR			BASE NO.	DIMENSIONS									APPROX. UNIT WT. - POUNDS	
FRAME SIZE	H.P.	RPM		A									LESS MOTOR	INCL MOTOR
182T	3	1800	901777	12 7/8									308	419
184T	5	1800	901777	12 7/8									308	471
213T	7 1/2	1800	901777	13 5/8									301	561
215T	10	1800	901777	13 5/8									301	590

Blackmer www.blackmer.com	TYPE	SIZE	UNIT STYLE	DIMENSIONS 105-103	
	XLW	2F	HRB	Section Effective Replaces Page 9 / 11	105 SEPTEMBER 2023 JUNE 2018

LEFT HAND ROTATION SHOWN.

*TOLERANCE ± 1/8"

TOLERANCE ON OTHER DIMENSIONS ± 1/4"

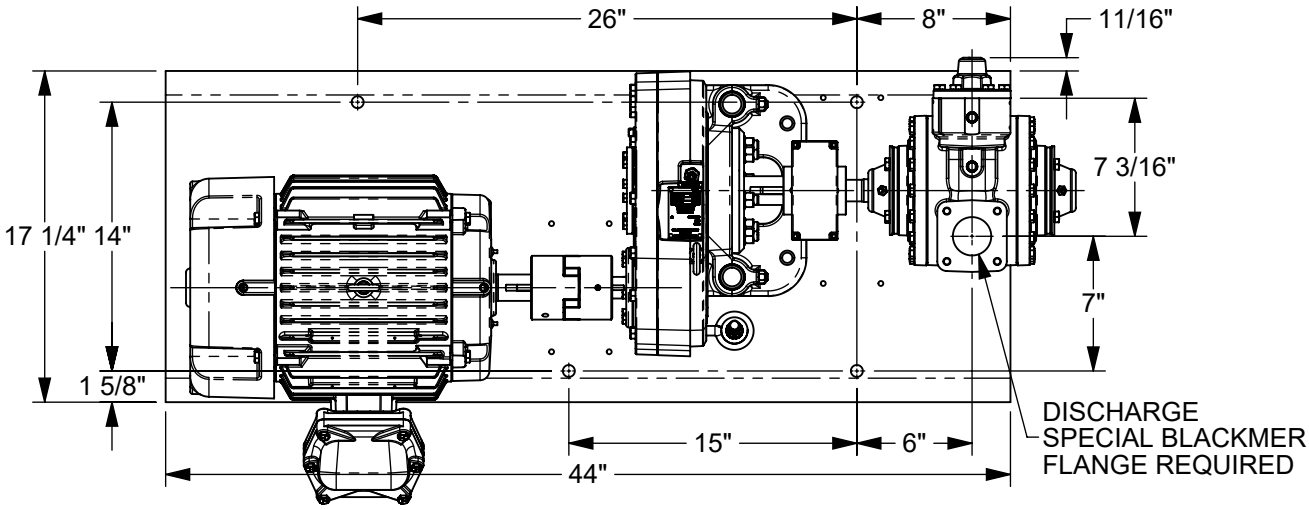

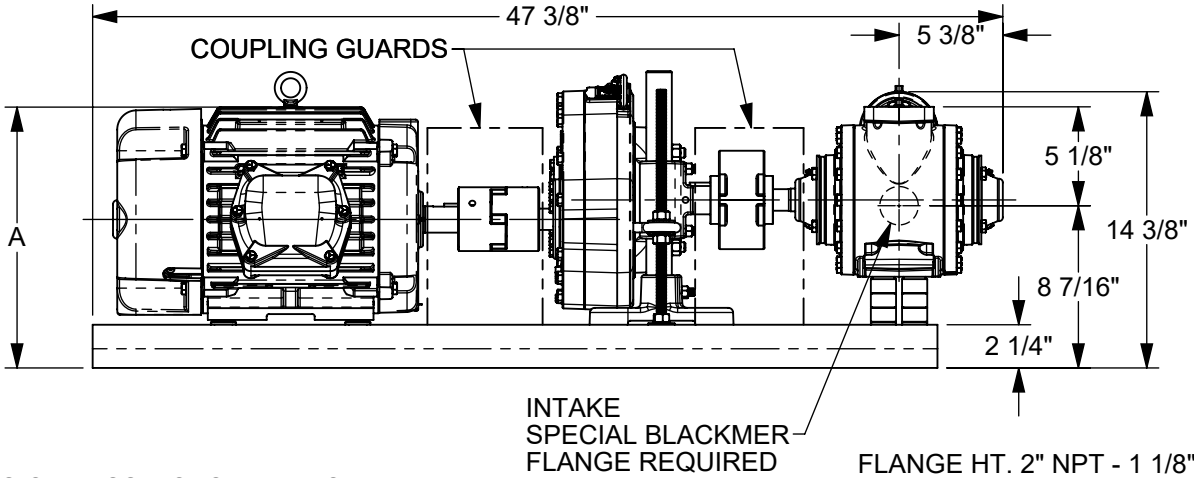

FLANGE HT. 2" NPT - 1 1/8"
2" WELD - 1 3/16"

"A" DIMENSION LESS MOTOR EYEBOLT

MOTOR			BASE NO.	DIMENSIONS									APPROX. UNIT WT. - POUNDS	
FRAME SIZE	H.P.	RPM		A									LESS MOTOR	INCL MOTOR
182T	3	1800	901777	12 7/8									308	419
184T	5	1800	901777	12 7/8									308	471
213T	7 1/2	1800	901777	13 5/8									301	561
215T	10	1800	901777	13 5/8									301	590

Blackmer www.blackmer.com	TYPE	SIZE	UNIT STYLE	DIMENSIONS 105-103	
	XLW	2F	N15	Section Effective Replaces Page 10 / 11	105 SEPTEMBER 2023 JUNE 2018

RIGHT HAND ROTATION SHOWN.

BENT STEEL BASEPLATE

*TOLERANCE ± 1/8"

TOLERANCE ON OTHER DIMENSIONS ± 1/4"

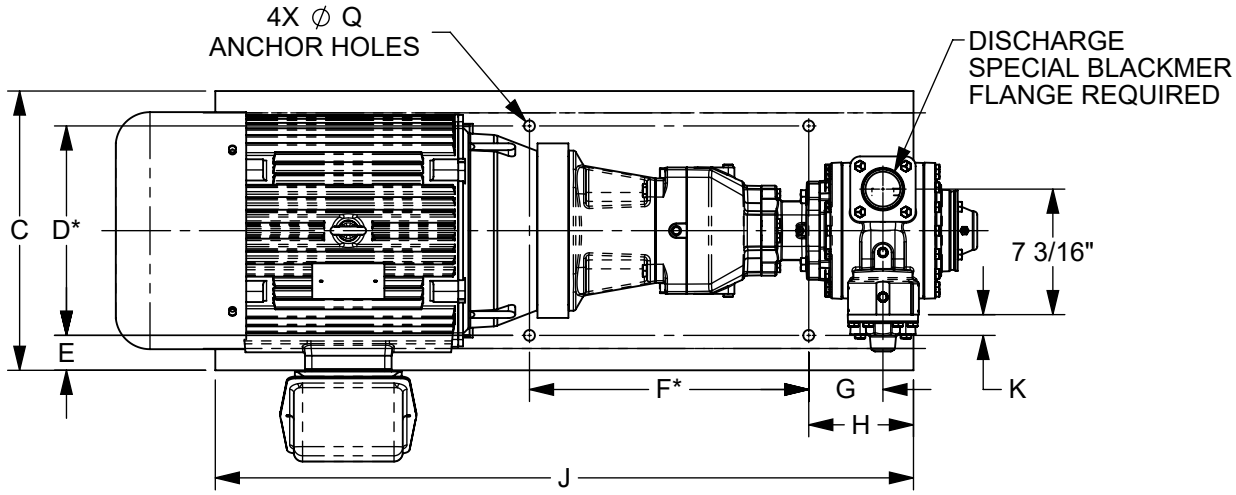

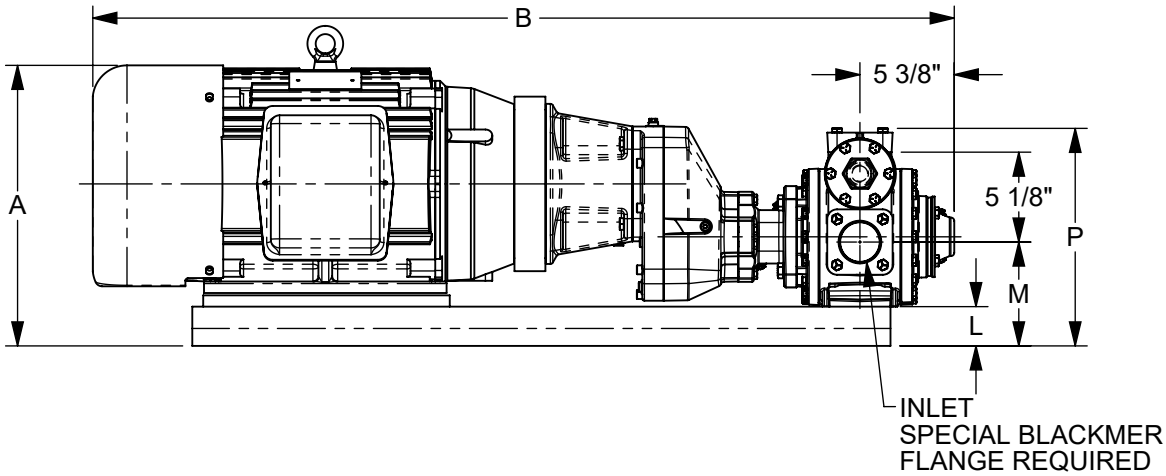

"A" DIMENSION LESS MOTOR EYEBOLT

MOTOR			BASE NO.	DIMENSIONS														APPROX. UNIT WT. - POUNDS	
FRAME SIZE	H.P.	RPM		A	B	C	D	E	F	G	H	J	K	L	M	P	Q	LESS MOTOR	INCL MOTOR
143TC	1	1800	905610	14	34	13	10	1 1/2	12	2 3/4	6	30 1/2	3/16	1 3/4	5 1/2	12	7/16	195	242
145TC	1 1/2	1800	905610	12 3/4	35 1/2	13	10	1 1/2	12	2 3/4	6	30 1/2	3/16	1 3/4	5 1/2	12	7/16	195	281
182TC	3	1800	905611	13 7/8	36 1/8	13	10	1 1/2	12	2 3/4	6	30 1/2	3/16	1 3/4	5 1/2	12	7/16	196	368
184TC	5	1800	905611	13 7/8	38 1/8	13	10	1 1/2	12	2 3/4	6	30 1/2	3/16	1 3/4	5 1/2	12	7/16	196	370
213TC	7 1/2	1800	905612	15 1/8	40 1/8	13 1/2	10	1 3/4	12	4 1/4	6	32 1/4	3/16	2 1/4	5 15/16	12 7/16	7/16	205	441
215TC	10	1800	905612	15 1/8	43 1/8	13 1/2	10	1 3/4	12	4 1/4	6	32 1/4	3/16	2 1/4	5 15/16	12 7/16	7/16	205	479
---	---	---	---	---	---	---	---	---	---	---	---	---	---	---	---	---	---	---	---
---	---	---	---	---	---	---	---	---	---	---	---	---	---	---	---	---	---	---	---

Blackmer www.blackmer.com	TYPE	SIZE	UNIT STYLE	DIMENSIONS 105-103	
	XLW	2F	N15	Section Effective Replaces Page 11 / 11	105 SEPTEMBER 2023 JUNE 2018

RIGHT HAND ROTATION SHOWN.

BASETEK ® ANSI 139 OR 245 BASE

*TOLERANCE ± 1/8"

TOLERANCE ON OTHER DIMENSIONS ± 1/4"

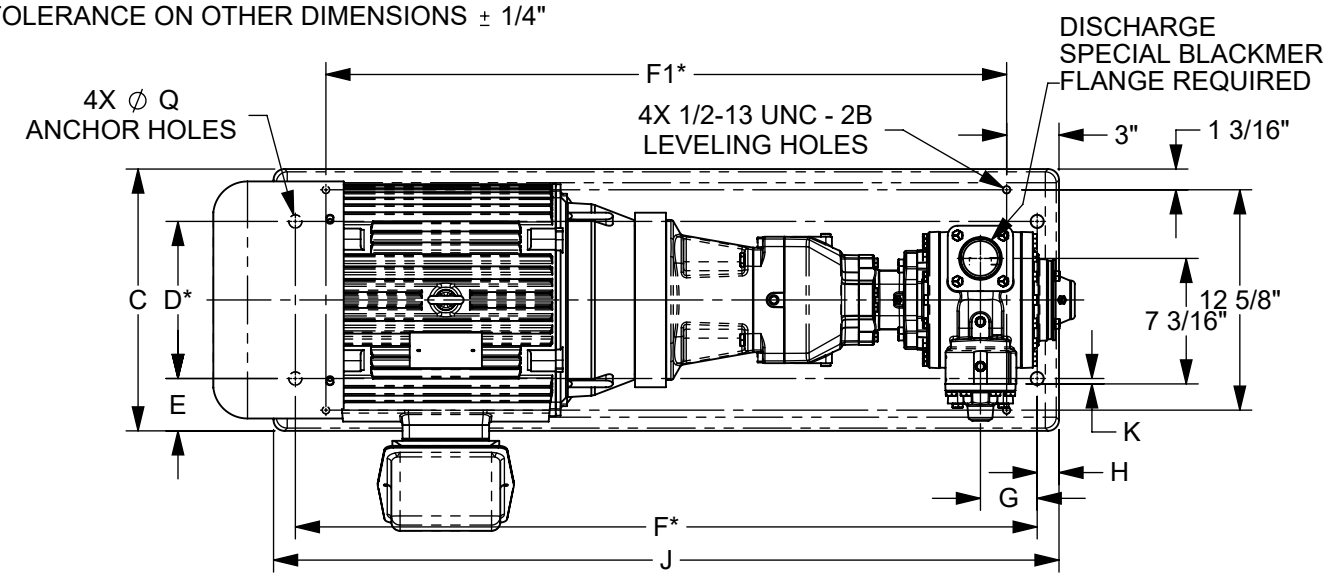

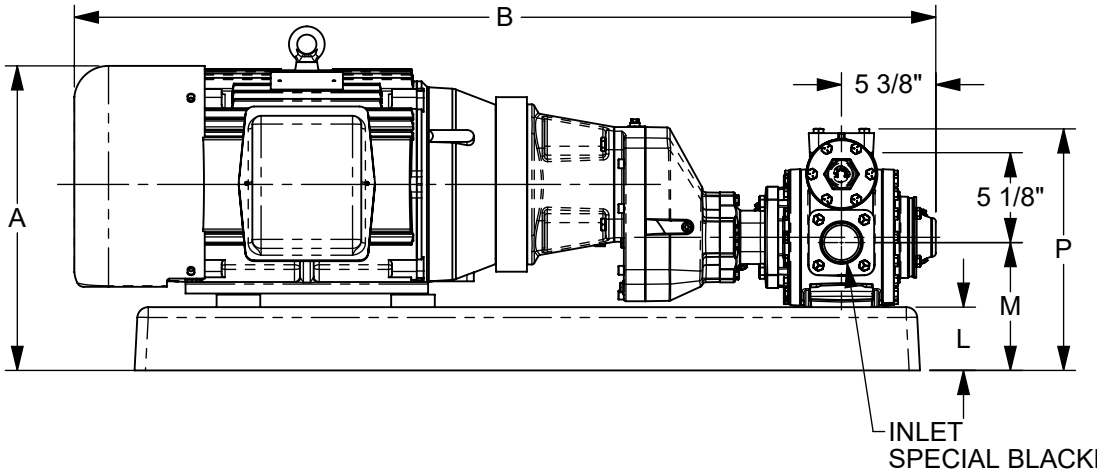

"A" DIMENSION LESS MOTOR EYEBOLT

MOTOR			BASE NO.	DIMENSIONS															APPROX. UNIT WT. - POUNDS	
FRAME SIZE	H.P.	RPM		A	B	C	D	E	F	F1	G	H	J	K	L	M	P	Q	LESS MOTOR	INCL MOTOR
143TC	1	1800	905630	15 7/8	34	15	9	3	36 1/2	33	5 1/4	1 1/4	39	5/16	3 5/8	7 5/16	13 13/16	3/4	316	363
145TC	1 1/2	1800	905650	14 5/8	35 1/2	15	9	3	36 1/2	33	5 1/4	1 1/4	39	5/16	3 5/8	7 5/16	13 13/16	3/4	316	402
182TC	3	1800	905631	15 3/4	36 1/8	15	9	3	36 1/2	33	5 1/4	1 1/4	39	5/16	3 5/8	7 5/16	13 13/16	3/4	311	483
184TC	5	1800	905651	15 3/4	38 1/8	15	9	3	36 1/2	33	5 1/4	1 1/4	39	5/16	3 5/8	7 5/16	13 13/16	3/4	311	485
213TC	7 1/2	1800	905632	16 1/2	40 1/8	15	9	3	42 1/2	39	5 1/4	1 1/4	45	5/16	3 5/8	7 5/16	13 13/16	3/4	338	574
215TC	10	1800	905652	16 1/2	43 1/8	15	9	3	42 1/2	39	5 1/4	1 1/4	45	5/16	3 5/8	7 5/16	13 13/16	3/4	338	612
---	---	---	---	---	---	---	---	---	---		---	---	---	---	---	---	---	---	---	---
---	---	---	---	---	---	---	---	---	---		---	---	---	---	---	---	---	---	---	---