Blackmer www.blackmer.com	TYPE	SIZE	UNIT STYLE	DIMENSIONS 108-109	
	SMVP 50C SMVP 100C	2	PO	Section Effective Replaces Page 1 / 2	100 JULY 2015 JULY 2002

RIGHT HAND ROTATION

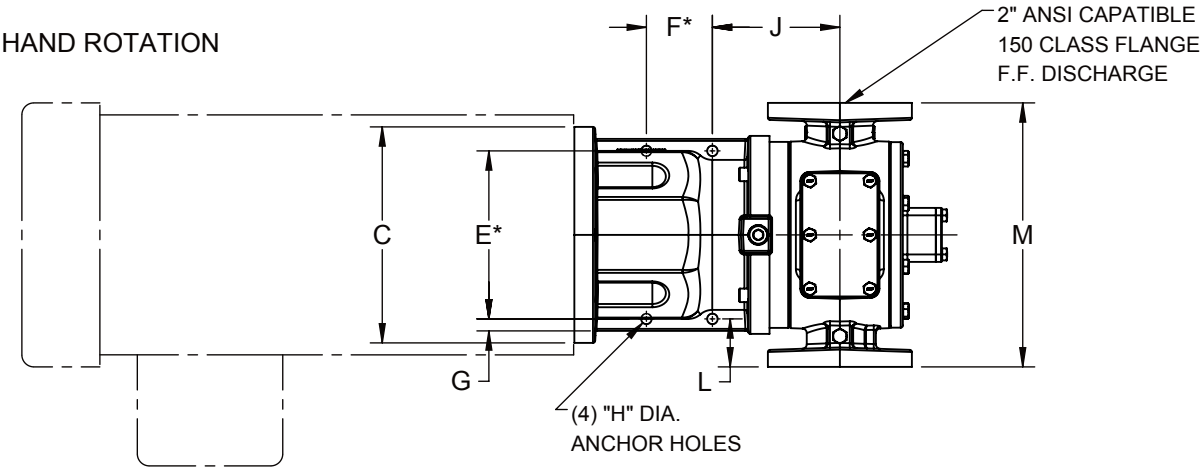

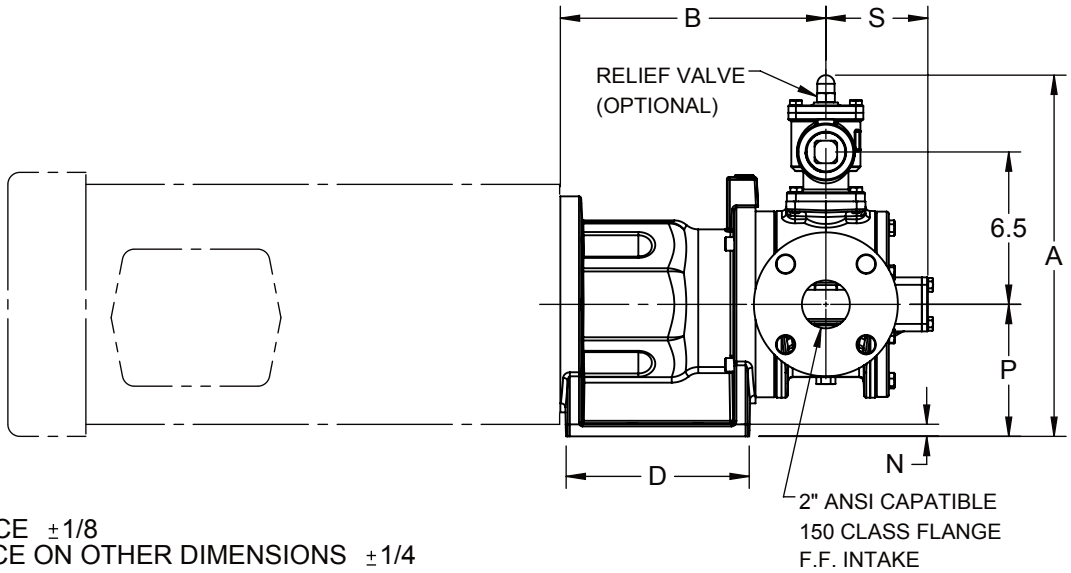

* TOLERANCE ±1/8
TOLERANCE ON OTHER DIMENSIONS ±1/4

MOTOR		DIMENSIONS														UNIT WEIGHT	
FRAME SIZE	UNITS	A	B	C	D	E	F	G	H	J	L	M	N	P	S	UNITS	W / O MOTOR
182TC	IN	15.19	11.00	9.00	7.44	7.00	2.75	.50	.44	5.31	2.00	11.00	.50	5.50	4.38	LBS	120
184TC	MM	385,8	268,3	228,6	189,0	177,8	69,9	12,7	11,1	134,9	50,8	279,4	12,7	139,7	111,1	KG	54,4
213TC	IN	15.19	11.50	9.00	7.44	7.00	2.75	.50	.44	5.31	2.00	11.00	.50	5.50	4.38	LBS	125
215TC	MM	385,8	268,3	228,6	189,0	177,8	69,9	12,7	11,1	134,9	50,8	279,4	12,7	139,7	111,1	KG	56,7
254TC	IN	15.19	12.00	9.00	7.44	7.00	2.75	.50	.44	5.31	2.00	11.00	.50	5.50	4.38	LBS	125
256TC	MM	385,8	300,8	228,6	189,0	177,8	69,9	12,7	11,1	134,9	50,8	279,4	12,7	139,7	111,1	KG	56,7
	IN																
	MM																

Blackmer www.blackmer.com	MOTOR COUPLING ADAPTER SMVP 50C SMVP 100C MCA180TC	DIMENSIONS 108-109 Section 100 Effective JULY 2015 Replaces JULY 2002 Page 2 / 2

RIGHT HAND ROTATION

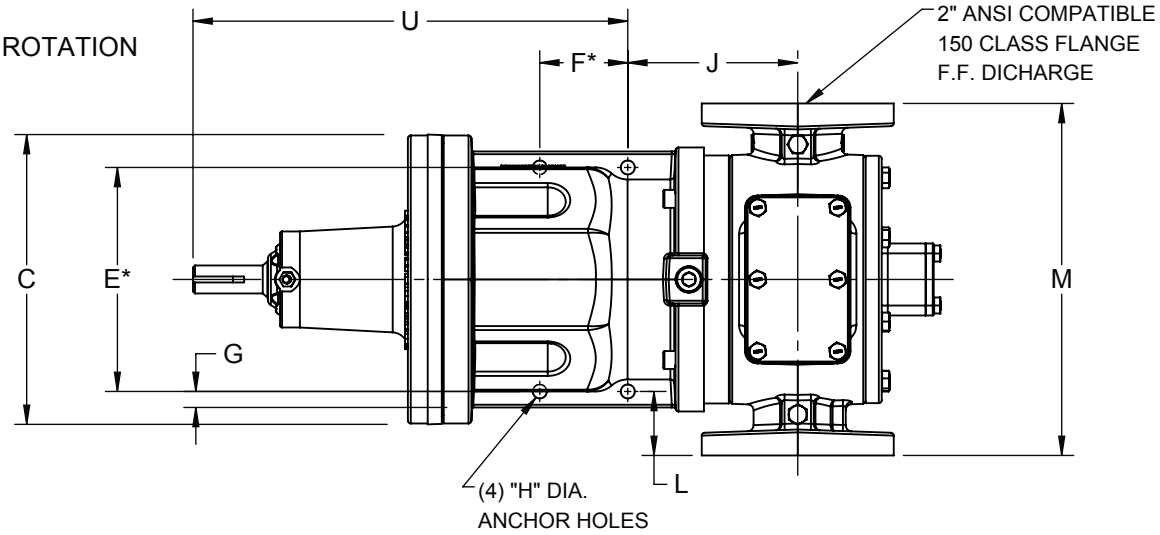

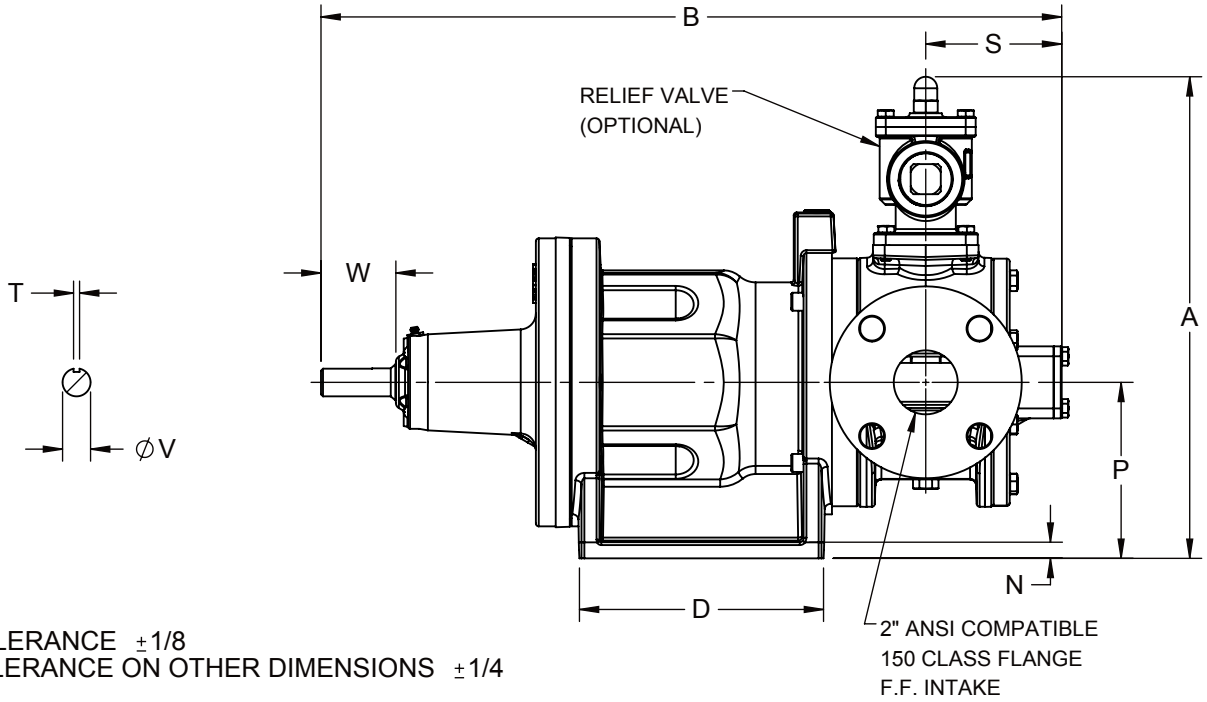

* TOLERANCE ±1/8
TOLERANCE ON OTHER DIMENSIONS ±1/4

		DIMENSIONS																		UNIT WEIGHT	
	UNITS	A	B	C	D	E	F	G	H	J	L	M	N	P	S	T	U	V	W	UNITS	
	IN	15.19	22.13	9.00	7.44	7.00	2.75	.50	.44	5.31	2.00	11.00	.50	5.50	4.38	.19	12.81	.88	1.75	LBS	145
	MM	385,8	561,6	228,6	189,0	177,8	69,9	12,7	11,1	134,9	50,8	279,4	12,7	139,7	111,1	4,8	315,0	22,2	44,5	KG	66
	IN																				
	MM																				