	TYPE	SIZE	UNIT STYLE	DIMENSIONS 108-119	
www.blackmer.com	SMVP 300C	4	PO	Section Effective Replaces Page 1 / 2	100 MARCH 2018 NEW

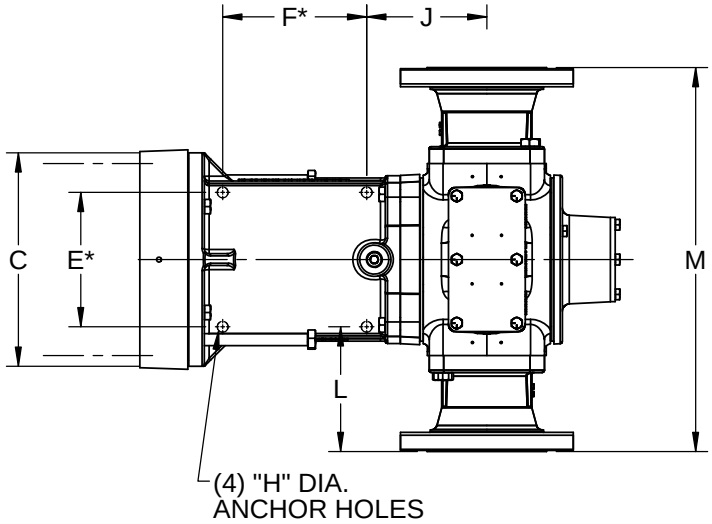

RIGHT HAND ROTATION

BLACKMER FLANGE TYPE	UNITS	W	M
4" ANSI R.F. 150 LBS.	IN	5	20
	MM	127	508
4" WELD	IN	1-1/4	12-1/2
	MM	31,8	317,5

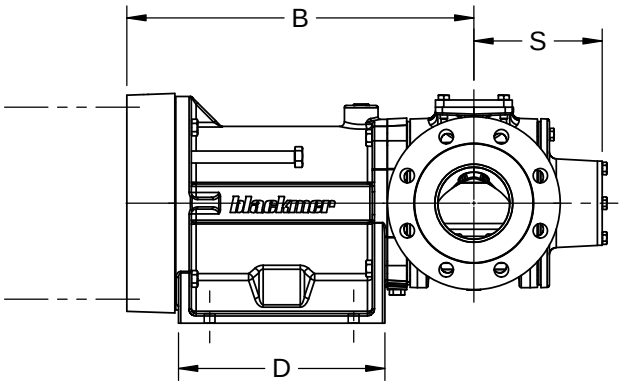

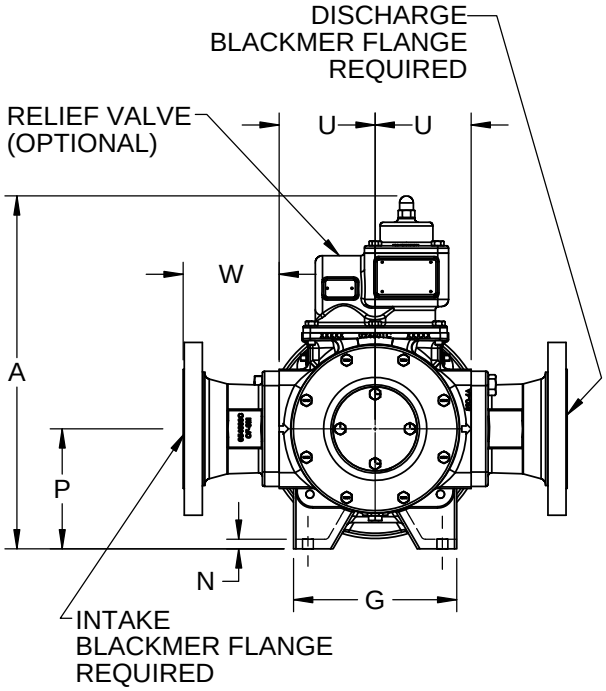

* TOLERANCE ±1/8
TOLERANCE ON OTHER DIMENSIONS ±1/4

MOTOR		DIMENSIONS														UNIT WEIGHT	
FRAME SIZE	UNITS	A	B	C	D	E	F	G	H	J	L	N	P	S	U	UNITS	W / O MOTOR
254TC	IN	18.50	17.63	11.13	10.75	7.00	7.50	8.50	.56	6.25	6.50	.50	6.25	6.88	5.00	LBS	340
256TC	MM	469,9	447,7	282,4	273,1	177,8	190,5	215,9	14,3	158,8	165,1	12,7	158,8	174,6	127	KG	154,4
284TC	IN	18.50	18.13	11.13	10.75	7.00	7.50	8.50	.56	6.25	6.50	.50	6.25	6.88	5.00	LBS	350
286TC	MM	469,9	460,4	282,4	273,1	177,8	190,5	215,9	14,3	158,8	165,1	12,7	158,8	174,6	127	KG	158,9
	IN															LBS	
	MM															KG	
	IN																
	MM																

www.blackmer.com	MOTOR COUPLING ADAPTER		DIMENSIONS 108-119	
	SMVP 300C	MCA280TC	Section	100
			Effective	MARCH 2018
			Replaces	NEW
			Page 2 / 2	

RIGHT HAND ROTATION

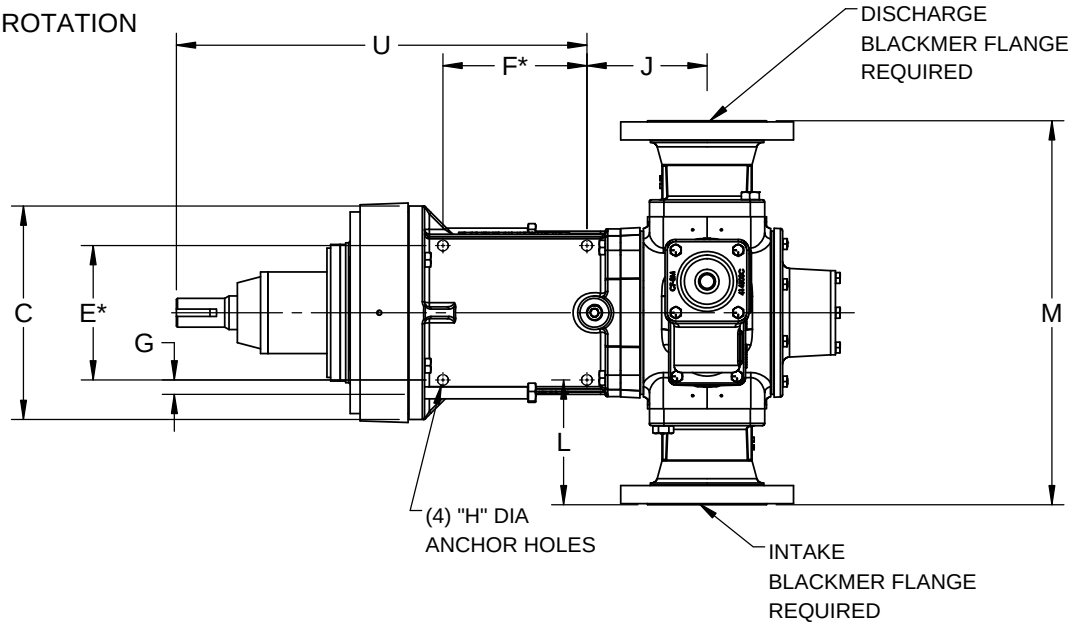

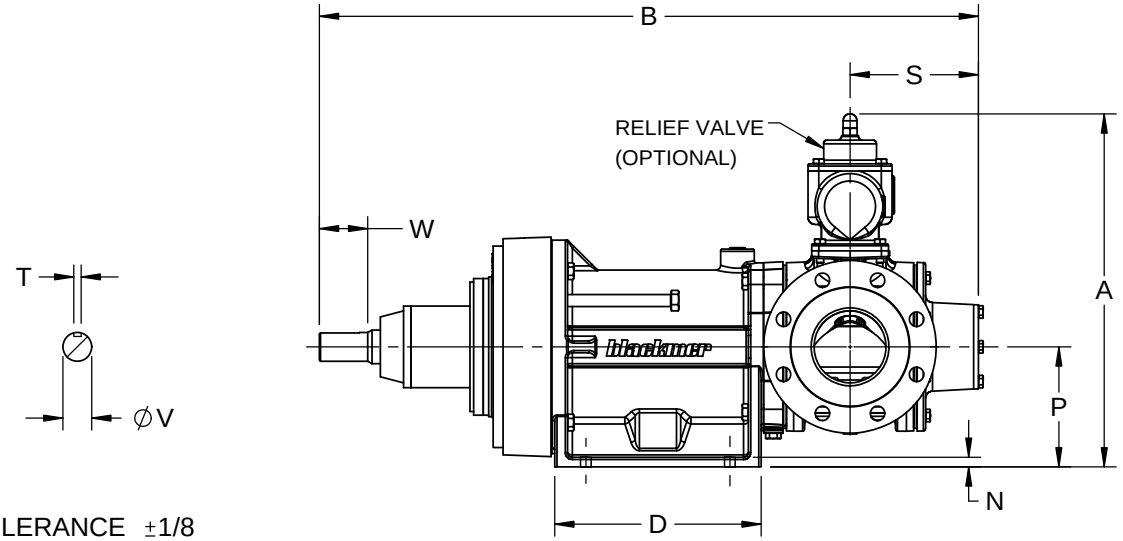

* TOLERANCE ±1/8
TOLERANCE ON OTHER DIMENSIONS ±1/4

		DIMENSIONS																		UNIT WEIGHT	
	UNITS	A	B	C	D	E	F	G	H	J	L	M	N	P	S	T	U	V	W	UNITS	
	IN	18.50	34.25	11.13	10.75	7.00	7.50	.75	.56	6.25	6.50	20.00	.50	6.25	6.88	.38	21.13	1.50	2.50	LBS	370
	MM	469,9	870	282,4	273,1	177,8	190,5	19,1	14,3	158,8	165,1	508	12,7	158,8	174,6	9,5	536,6	38,1	63,5	KG	168,2
	IN																				
	MM																				