DIMENSIONS: HD082C

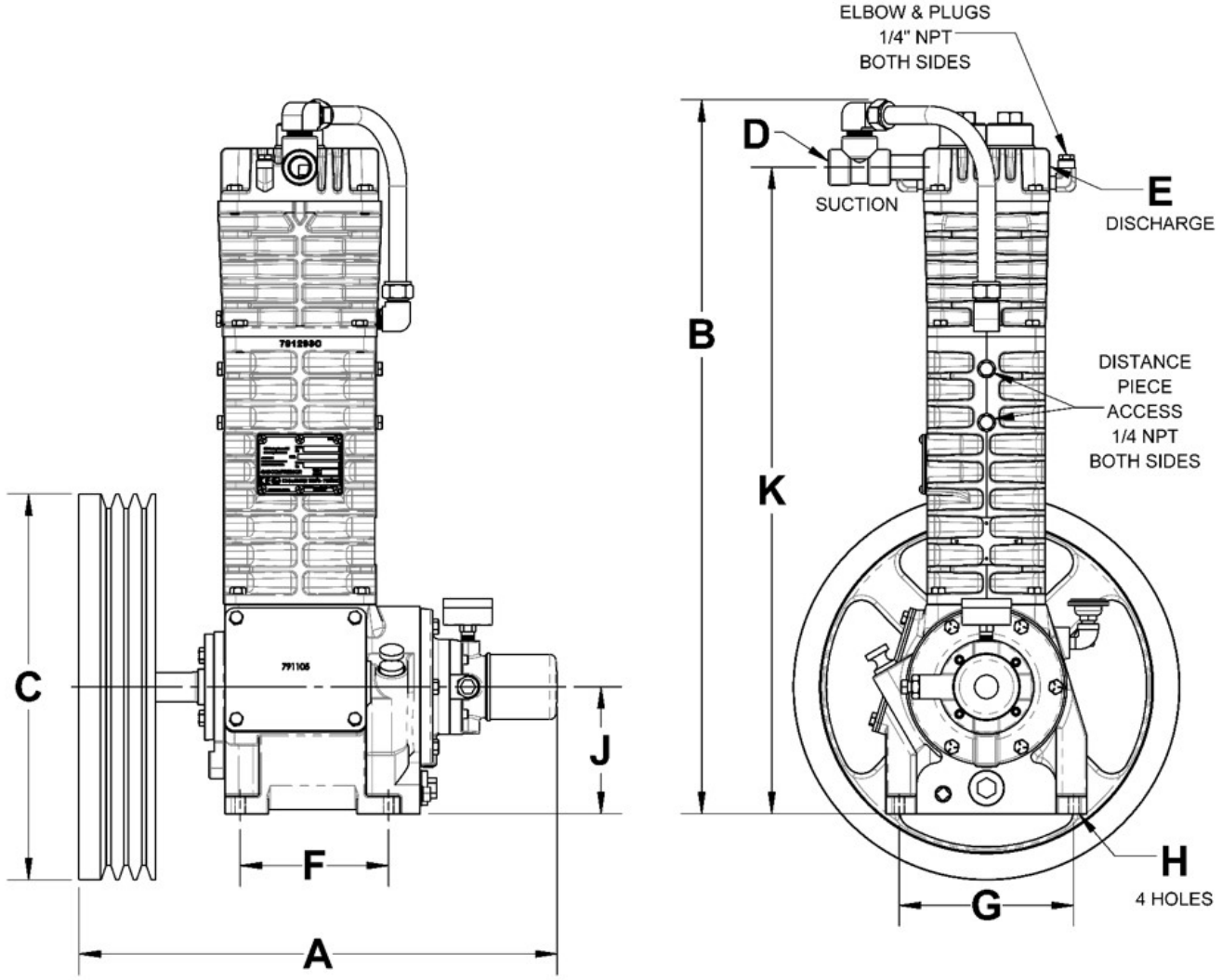

In. (mm)

Model	A	B *	C	D	E	F	G	H	J	K
HD082C	20.23 (514)	30.2 (767)	16.35 (415)	¾ NPT	¾ NPT	6.28 (160)	7.38 (187)	0.44 (11)	5.38 (137)	27.4 (695)

* Add 2.7" (69 mm) for units with unloaders.

DIMENSIONS:
HD161C, HD162C and HD163C

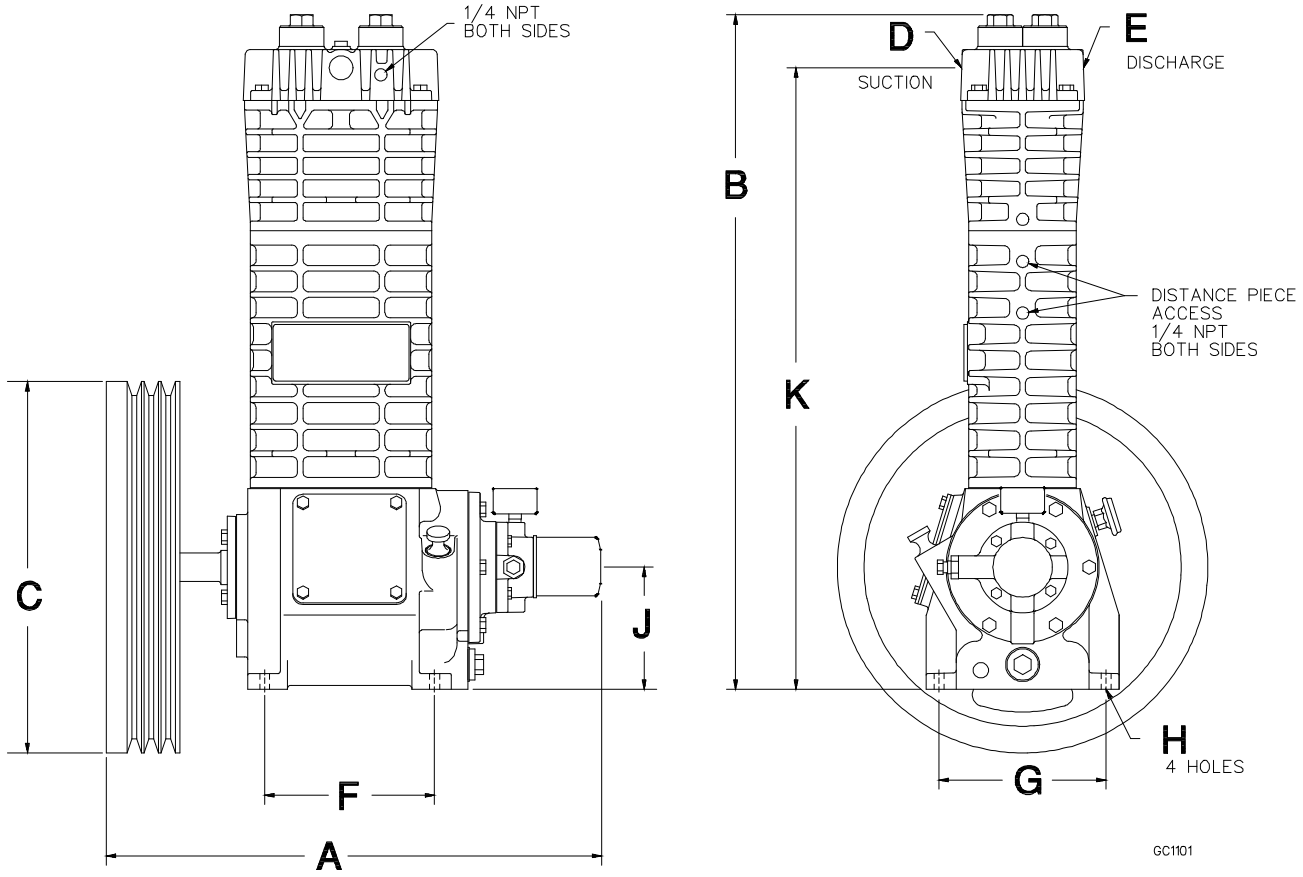

In. (mm)

Model	A	B *	C	D	E	F	G	H	J	K
HD161C	21.9 (556)	25.7 (653)	16.35 (415)	¾ NPT	¾ NPT	7.5 (190)	7.38 (187)	0.44 (11)	5.38 (137)	23.34 (593)
HD162C	21.9 (556)	29.7 (754)	16.35 (415)	¾ NPT	¾ NPT	7.5 (190)	7.38 (187)	0.44 (11)	5.38 (137)	27.34 (694)
HD163C	21.9 (556)	33.7 (856)	16.35 (415)	¾ NPT	¾ NPT	7.5 (190)	7.38 (187)	0.44 (11)	5.38 (137)	31.34 (796)

* Add 2.7" (69 mm) for units with unloaders.

DIMENSIONS:
HD361C, HD362C, HD363C
HD602C, HD603C

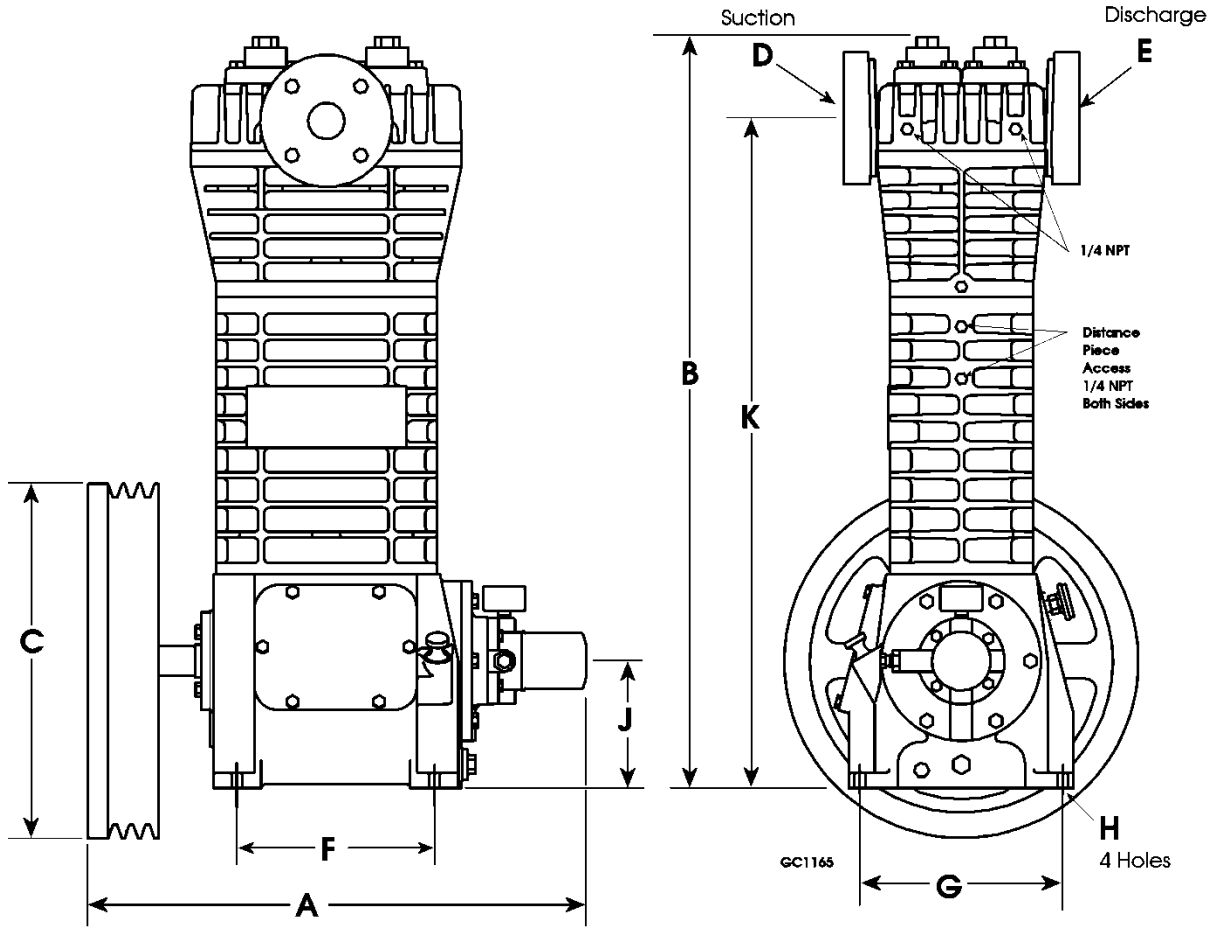

In. (mm)

Model	A	B *	C	D	E	F	G	H	J	K
HD361C	23.4 (594)	30.0 (763)	16.35 (415)	1.5” ANSI 300#	1.5” ANSI 300#	9.12 (232)	9.37 (238)	0.5 (12.7)	5.88 (149)	26.13 (663)
HD362C	23.4 (594)	34.7 (880)	16.35 (415)			9.12 (232)	9.37 (238)	0.5 (12.7)	5.88 (149)	30.79 (782)
HD363C	23.4 (594)	39.3 (998)	16.35 (415)			9.12 (232)	9.37 (238)	0.5 (12.7)	5.88 (149)	35.4 (900)
HD602C	25.6 (650)	41.0 (1,042)	20.35 (517)	2” ANSI 300#	2” ANSI 300#	10.5 (267)	12.0 (305)	0.56 (14.2)	8.25 (210)	37.0 (940)
HD603C	25.6 (650)	47.1 (1,196)	20.35 (517)			10.5 (267)	12.0 (305)	0.56 (14.2)	8.25 (210)	43.1 (1,095)

* For units with Unloaders, add 1.6" (40mm).

DIMENSIONS:
HDL322C, HDL342C, HDL343C, HDL362C, HDL363C, HDL602C, HDL603C, HDL642C, HDL643C

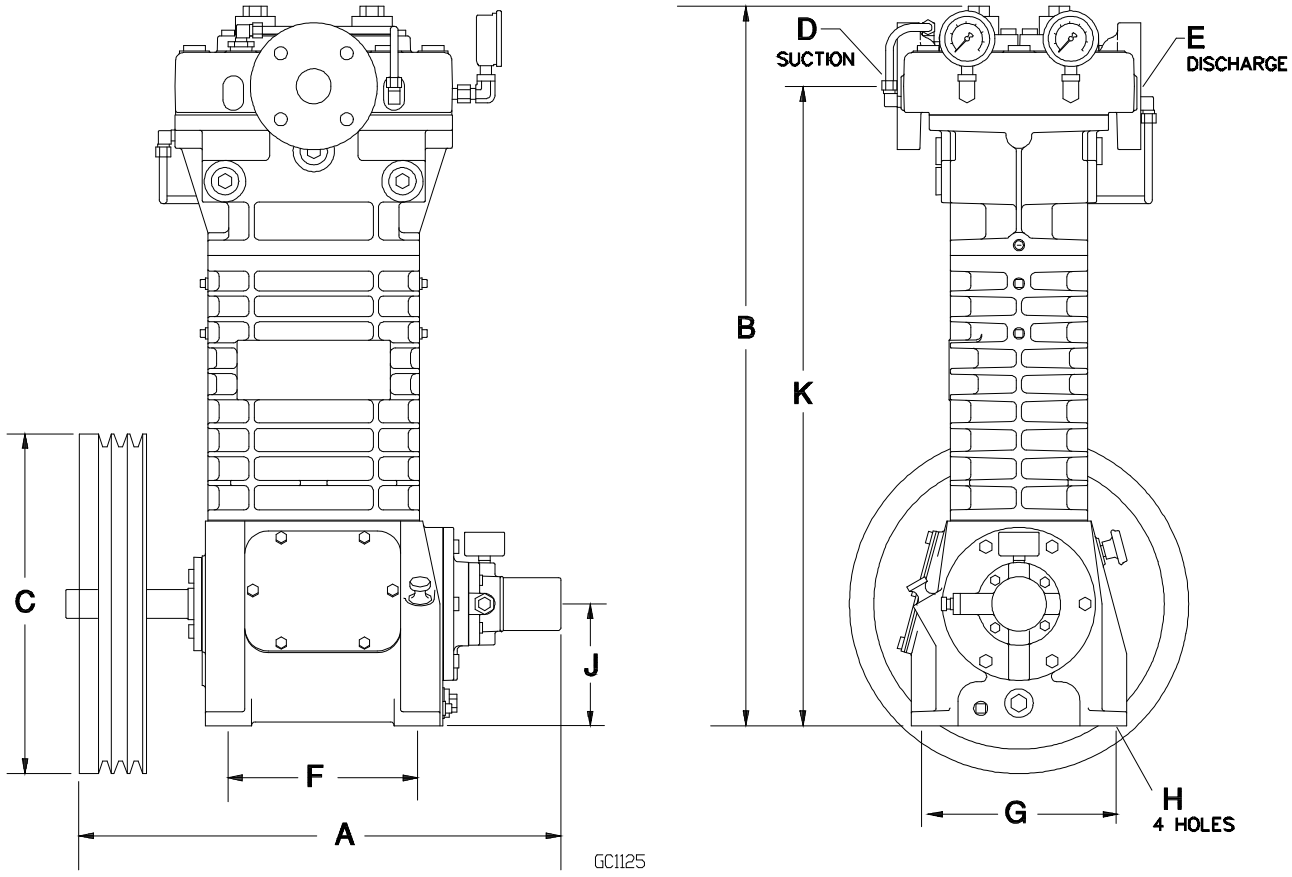

In. (mm)

Model	A	B *	C	D	E	F	G	H	J	K
HDL362C	23.4 (594)	34.7 (880)	16.35 (415)	1.5” ANSI 300#	1.5” ANSI 300#	9.12 (232)	9.37 (238)	0.5 (12.7)	5.88 (149)	30.79 (782)
HDL363C	23.4 (594)	39.3 (998)	16.35 (415)	1.5” ANSI 300#	1.5” ANSI 300#	9.12 (232)	9.37 (238)	0.5 (12.7)	5.88 (149)	35.4 (900)
HDL322C HDL342C	23.4 (594)	34.7 (880)	16.35 (415)	1.5” ANSI 600#	1.5” ANSI 600#	9.12 (232)	9.37 (238)	0.5 (12.7)	5.88 (149)	30.79 (782)
HDL343C	23.4 (594)	39.3 (998)	16.35 (415)	1.5” ANSI 600#	1.5” ANSI 600#	9.12 (232)	9.37 (238)	0.5 (12.7)	5.88 (149)	35.4 (900)
HDL602C	25.6 (650)	41.0 (1,042)	20.35 (517)	2” ANSI 300#	2” ANSI 300#	10.5 (267)	12.0 (305)	0.56 (14.2)	8.25 (210)	37.0 (940)
HDL603C	25.6 (650)	47.1 (1,196)	20.35 (517)	2” ANSI 300#	2” ANSI 300#	10.5 (267)	12.0 (305)	0.56 (14.2)	8.25 (210)	43.1 (1,095)
HDL642C	25.6 (650)	41.0 (1,042)	20.35 (517)	2” ANSI 600#	2” ANSI 600#	10.5 (267)	12.0 (305)	0.56 (14.2)	8.25 (210)	37.0 (940)
HDL643C	25.6 (650)	47.1 (1,196)	20.35 (517)	2” ANSI 600#	2” ANSI 600#	10.5 (267)	12.0 (305)	0.56 (14.2)	8.25 (210)	43.1 (1,095)

* For units with Unloaders, add 1.6" (40mm). Note: Pressure gages shown are optional.

DIMENSIONS:
HD942B, HDL942B, HD943B, HDL943B

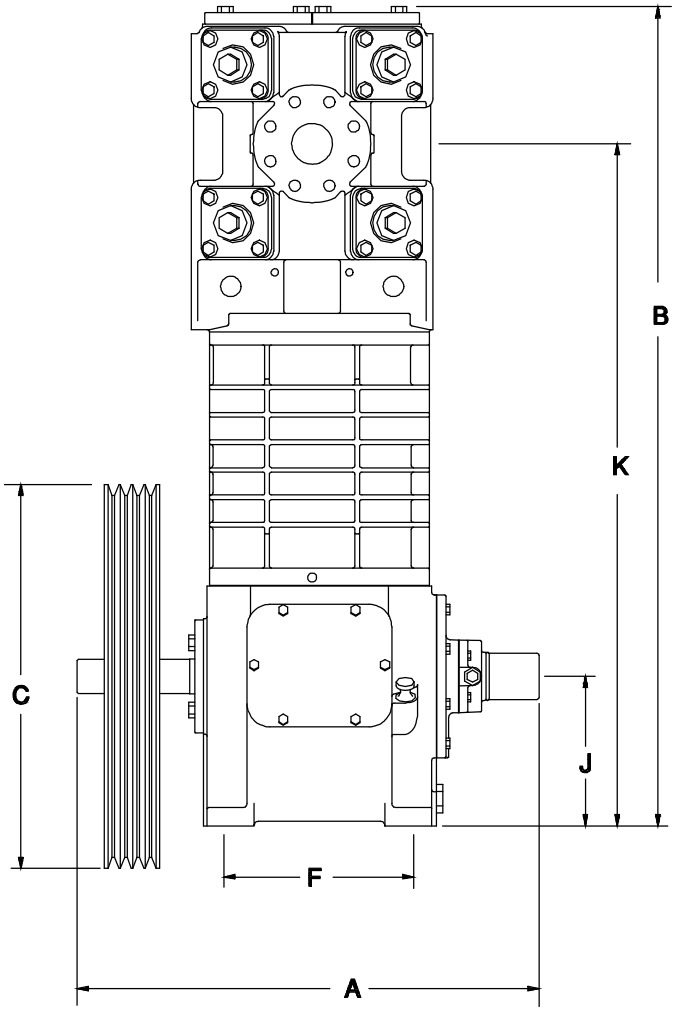

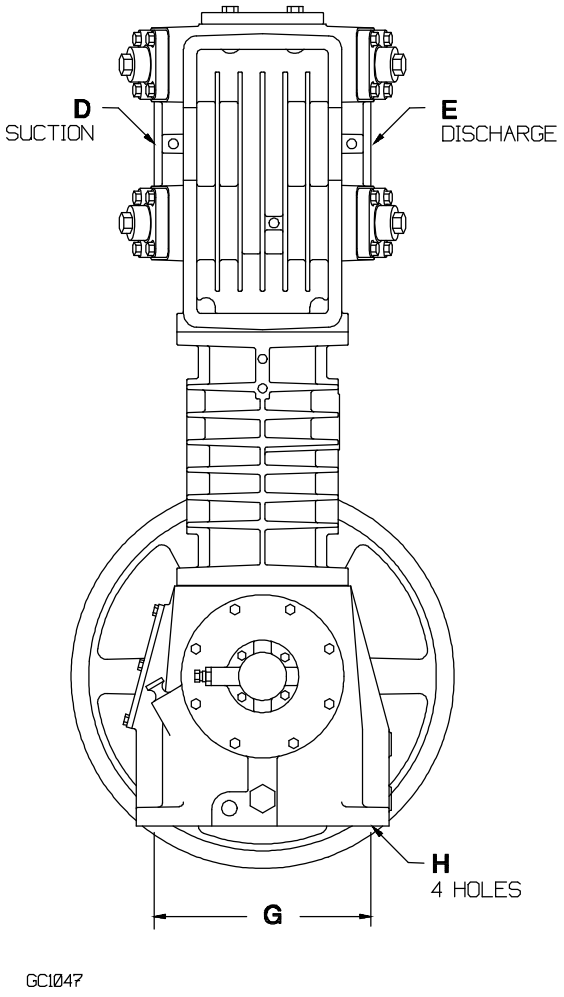

In. (mm)

Model	A	B	C	D	E	F	G	H	J	K
HD942B	25.56 (649)	45.23 (1,149)	21.2 (538)	2" ANSI 300#	2" ANSI 300#	10.5 (267)	12.0 (305)	0.56 (14.2)	8.25 (210)	37.63 (956)
HDL942B	25.56 (649)	45.84 (1,164)	21.2 (538)	2" ANSI 300#	2" ANSI 300#	10.5 (267)	12.0 (305)	0.56 (14.2)	8.25 (210)	37.63 (956)
HD943B	25.56 (649)	49.74 (1,263)	21.2 (538)	2" ANSI 300#	2" ANSI 300#	10.5 (267)	12.0 (305)	0.56 (14.2)	8.25 (210)	42.13 (1,070)
HDL943B	25.56 (649)	50.35 (1,279)	21.2 (538)	2" ANSI 300#	2" ANSI 300#	10.5 (267)	12.0 (305)	0.56 (14.2)	8.25 (210)	42.13 (1,070)

DIMENSIONS:
HD172C, HD173C, HDL172C, HDL173C

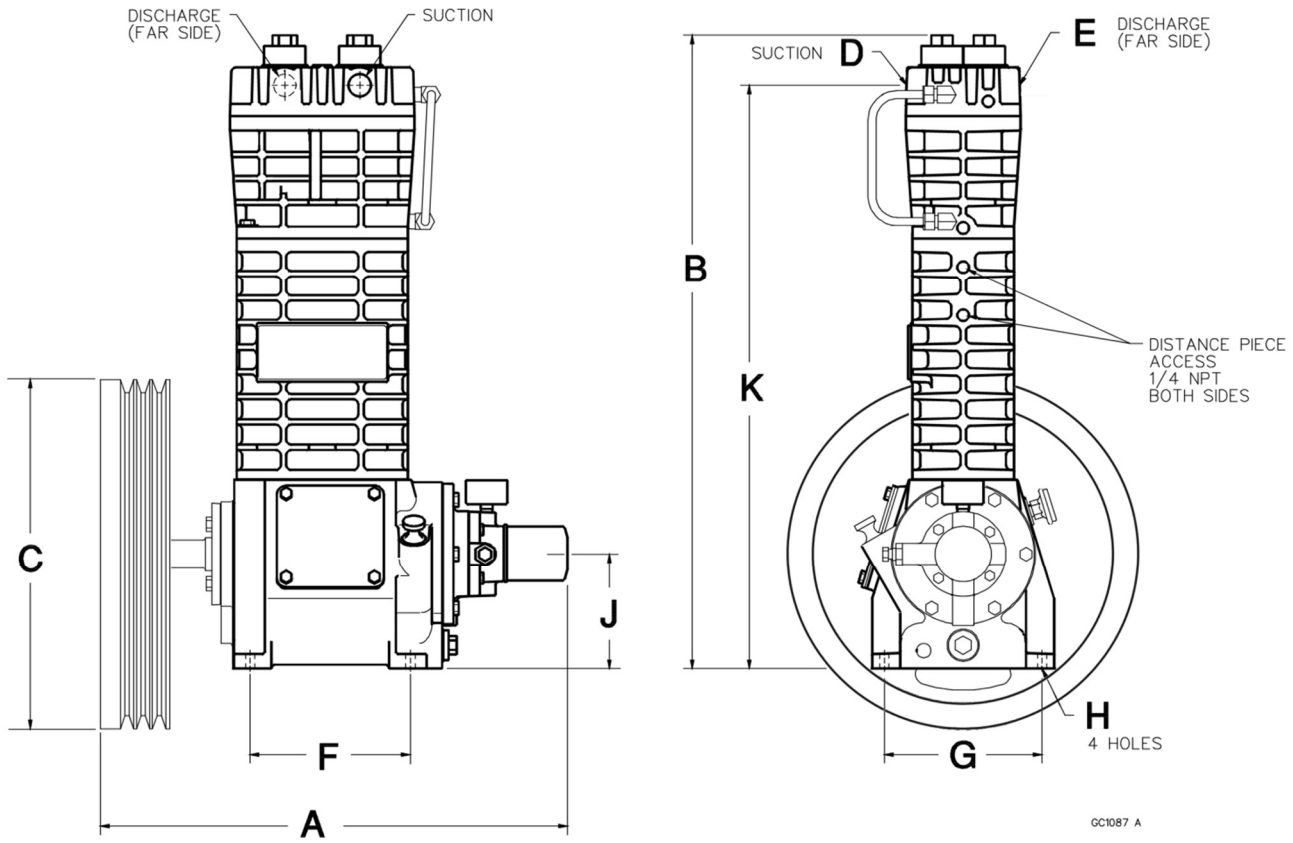

In. (mm)

Model	A	B*	C	D	E	F	G	H	J	K
HD172C	21.9 (556)	29.7 (755)	16.35 (415)	¾ NPT	¾ NPT	7.5 (191)	7.38 (187)	0.44 (11)	5.37 (136)	27.37 (695)
HD173C	21.9 (556)	33.89 (861)	16.35 (415)	¾ NPT	¾ NPT	7.5 (191)	7.38 (187)	0.44 (11)	5.37 (136)	31.56 (802)
HDL172C	21.9 (556)	29.7 (755)	16.35 (415)	¾ NPT	¾ NPT	7.5 (191)	7.38 (187)	0.44 (11)	5.37 (136)	26.82 (681)
HDL173C	21.9 (556)	33.89 (861)	16.35 (415)	¾ NPT	¾ NPT	7.5 (191)	7.38 (187)	0.44 (11)	5.37 (136)	31.01 (788)

* For units with Unloaders, add 2.7" (69 mm).

DIMENSIONS:
HD372C, HD373C, HD612C, HD613C

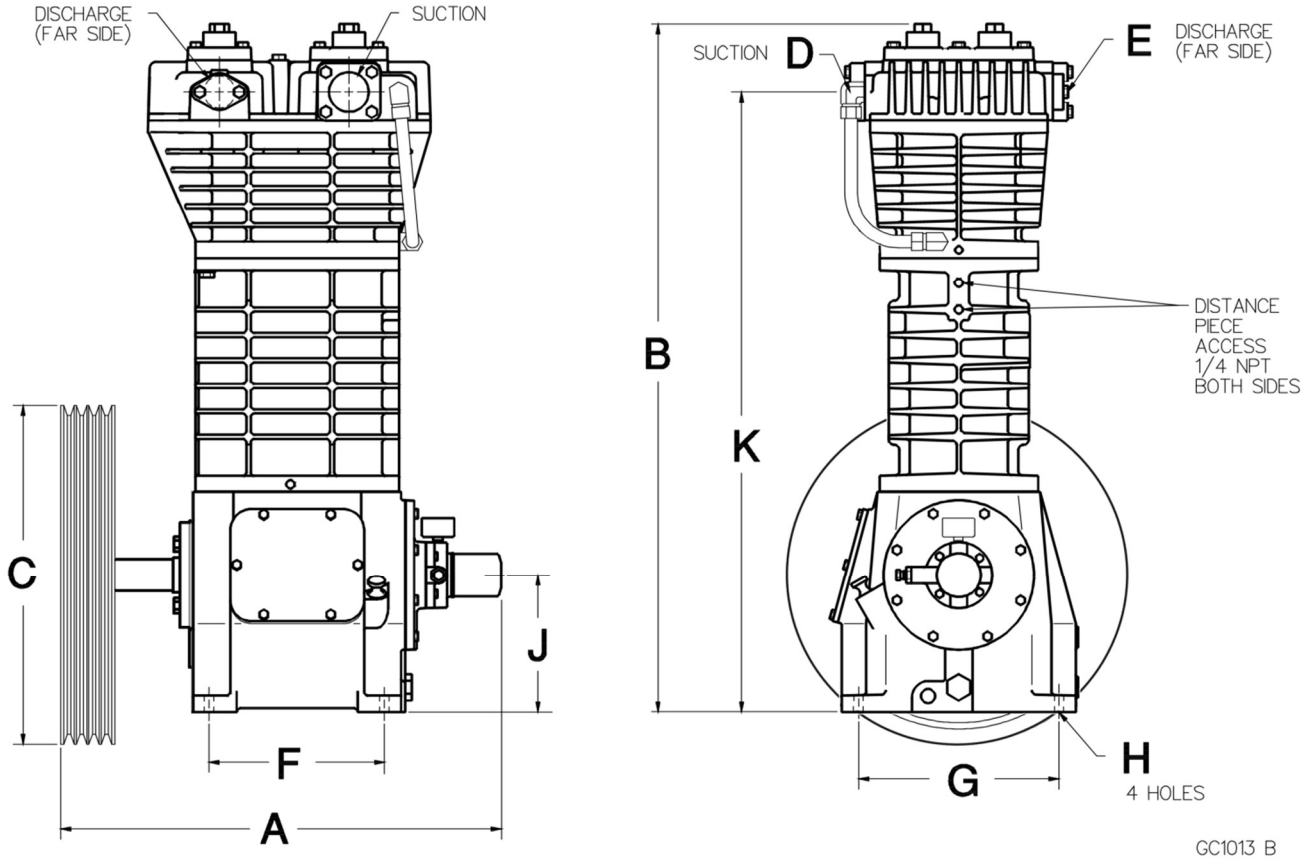

In. (mm)

Model	A	B	C	D	E	F	G	H	J	K
HD372C	23.4 (594)	34.7* (880*)	16.35 (415)	1¼ NPT	1 NPT	9.12 (232)	9.37 (238)	0.5 (12.7)	5.88 (149)	30.79 (782)
HD373C	23.4 (594)	39.3* (998*)	16.35 (415)	1¼ NPT	1 NPT	9.12 (232)	9.37 (238)	0.5 (12.7)	5.88 (149)	35.4 (900)
HD612C	26.4 (671)	41.3* (1,049*)	20.35 (517)	2**	1.5**	10.5 (267)	12.0 (305)	0.56 (14.2)	8.25 (210)	37.22 (945)
HD613C	26.4 (671)	47.42* (1,204*)	20.35 (517)	2**	1.5**	10.5 (267)	12.0 (305)	0.56 (14.2)	8.25 (210)	43.35 (1,101)

* For units with Unloaders, add 1.6" (40 mm).
** 2"NPT, 1.5"NPT, 2"WELD, & 1.5"WELD Available

DIMENSIONS:
HDL372C, HDL373C, HDL612C, HDL613C

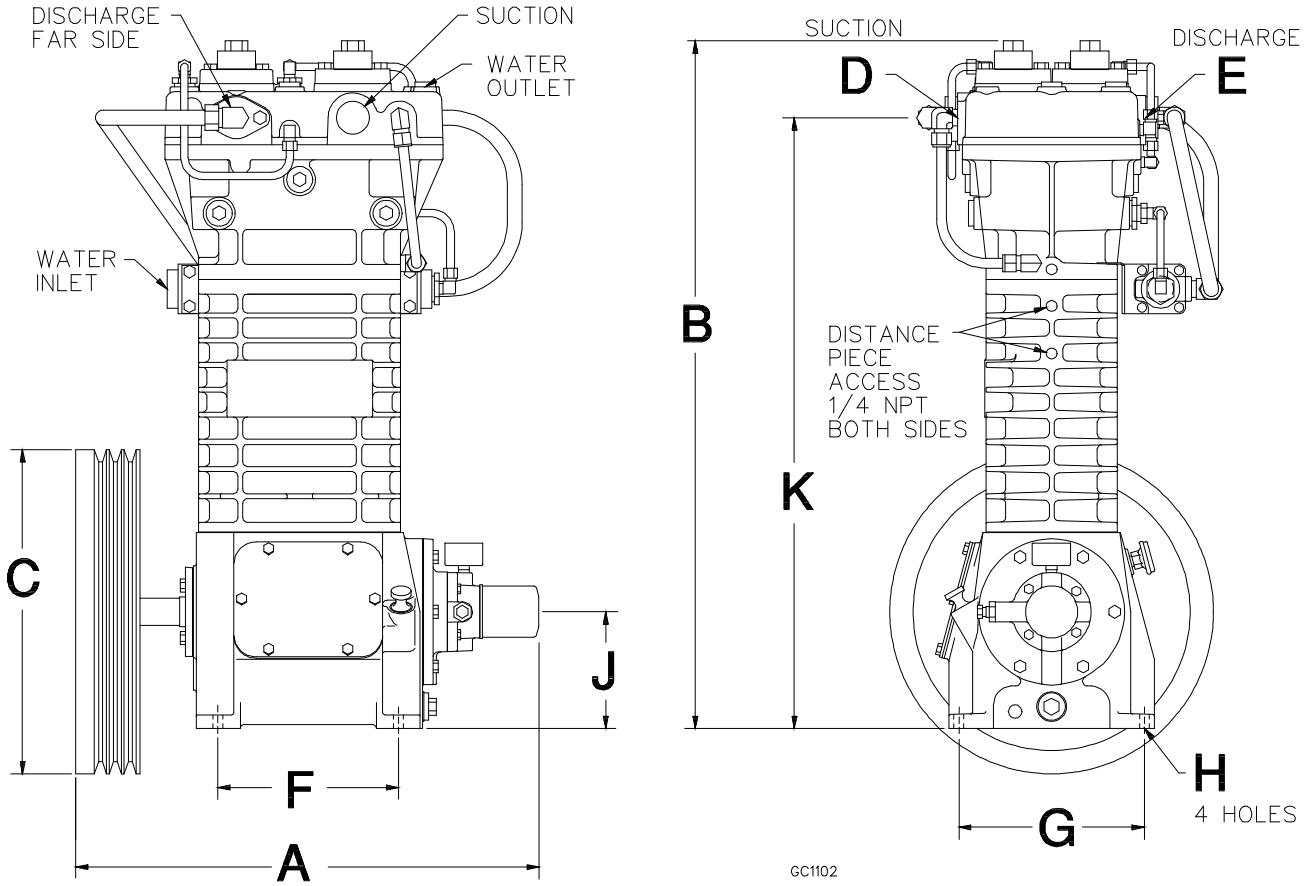

In. (mm)

Model	A	B	C	D	E	F	G	H	J	K
HDL372C	23.4 (594)	34.7* (880*)	16.35 (415)	1.25 NPT	1 NPT	9.12 (232)	9.37 (238)	0.5 (12.7)	5.88 (149)	30.79 (782)
HDL373C	23.4 (594)	39.3* (998*)	16.35 (415)	1.25 NPT	1 NPT	9.12 (232)	9.37 (238)	0.5 (12.7)	5.88 (149)	35.4 (900)
HDL612C	26.4 (671)	41.3* (1,049*)	20.35 (517)	2**	1.5**	10.5 (267)	12.0 (305)	0.56 (14.2)	8.25 (210)	37.22 (945)
HDL613C	26.4 (671)	47.42* (1,204*)	20.35 (517)	2**	1.5**	10.5 (267)	12.0 (305)	0.56 (14.2)	8.25 (210)	43.35 (1,101)

* On units with Unloaders, add 1.6" (40 mm).
** 2"NPT, 1.5"NPT, 2"WELD, & 1.5"WELD Available