| | TYPE | SIZE | UNIT STYLE | DIMENSIONS 205-105 |
|---|---|---|---|---|
| www.blackmer.com | TX400B | 4 | PO | Section 205<br>Effective Sept 2005<br>Replaces Dec 1995 |

W= INTAKE 4" WELD FLG.
X= DISCHARGE 3" WELD FLG.

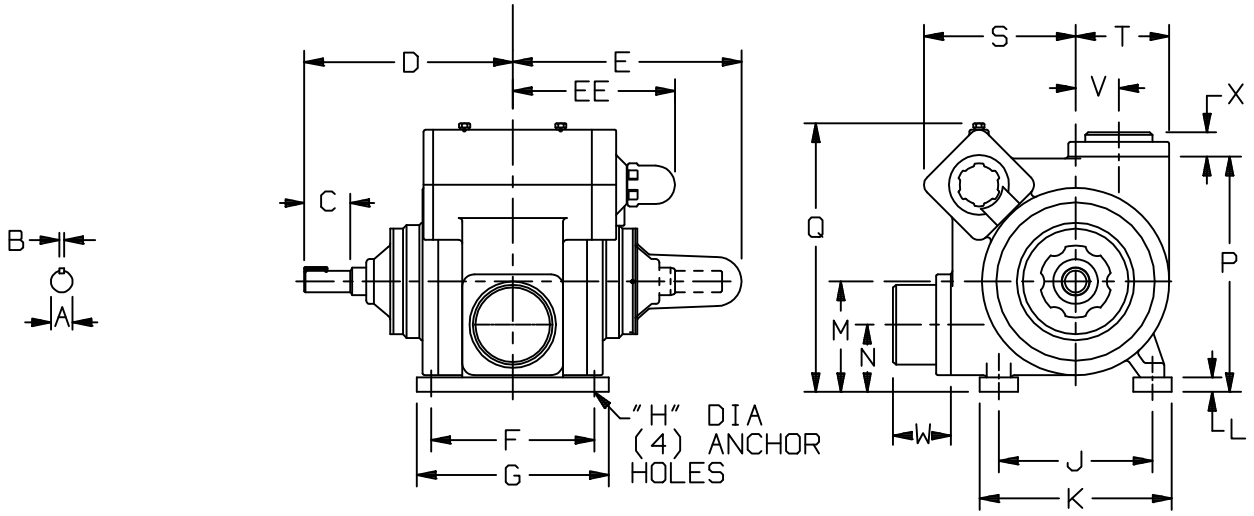


| MOTOR | | | UNITS | DIMENSIONS | | | | | | | | | |
|---|---|---|---|---|---|---|---|---|---|---|---|---|---|
| FRAME SIZE | | | | A | B | C | D | E | F | G | H | J | K |
| | | | IN | 1 1/8 | 1/4 | 2 3/8 | 10 7/8 | 11 7/8 | 8 1/2 | 10 | 5/8 | 8 | 10 |
| | | | MM | 28,6 | 6,4 | 60,3 | 276,2 | 301,6 | 215,9 | 254 | 15,9 | 203,2 | 254 |
| | | | | L | M | N | P | Q | R | S | T | U | V |
| | | | IN | 3/4 | 5 3/4 | 3 1/2 | 12 1/4 | 14 | — | 7 15/16 | 4 7/8 | — | 2 1/4 |
| | | | MM | 19,1 | 146,1 | 88,9 | 311,2 | 355,6 | — | 201,6 | 123,8 | — | 57,2 |
| | | | | W | X | Y | Z | AA | BB | CC | DD | EE | FF |
| | | | IN | 3 | 1 1/4 | 1 1/4 | 5/16 | — | — | — | — | 8 7/16 | — |
| | | | MM | 76,2 | 31,8 | 31,8 | 7,9 | — | — | — | — | 214,3 | — |
| | | | | WEIGHT WITHOUT FLANGES | | | | | | | | | |
| | | | LBS | 192 | | | | | | | | | |
| | | | KG | 87.1 | | | | | | | | | |