13 mm (1/2") Pump Maximum Flow Rate: 60.2 lpm (15.9 gpm)

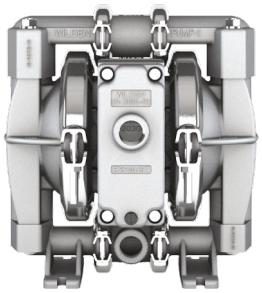

GPS1 METAL

DIMENSIONAL DRAWING

GPS1 Metal

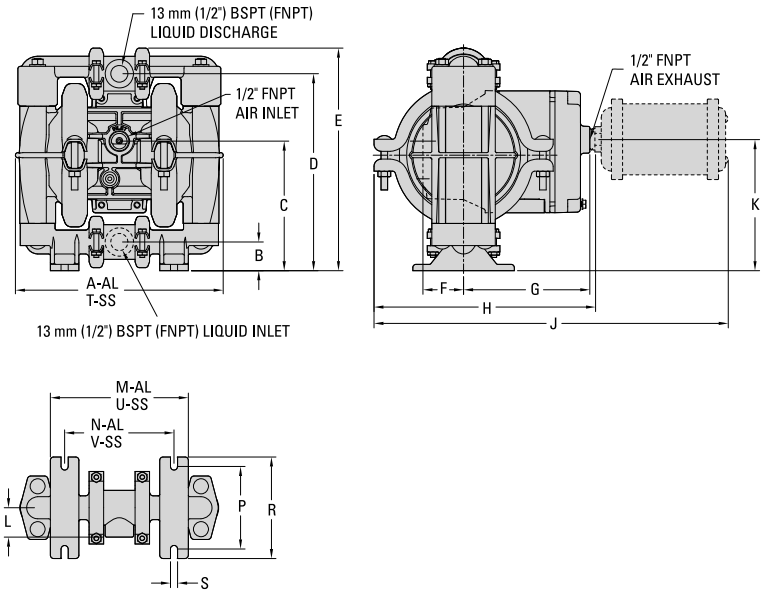

DIMENSIONS

ITEM	METRIC (mm)	STANDARD (inch)
A	208	8.2
B	28	1.1
C	130	5.1
D	198	7.8
E	224	8.8
F	41	1.6
G	126	5.0
H	216	8.5
J	354	14.0
K	131	5.2
L	30	1.2
M	137	5.4
N	109	4.3
P	84	3.3
R	102	4.0
S	8	0.3
T	203	8.0
U	142	5.6
V	112	4.4

LW0361 REV. A

PUMP DATA

Specifications:

Ship Weight..... Aluminum 6 kg (13 lb)
316 Stainless Steel 9 kg (20 lb)
Alloy C 9.5 kg (21 lb)
Air Inlet .....6 mm (1/4")
Liquid Inlet.....13 mm (1/2")
Liquid Outlet.....13 mm (1/2")

WILDEN®
22069 Van Buren Street
Grand Terrace, CA 92313-5607 USA
O: +1 (909) 422-1730 F: +1 (909) 783-3440
www.psgdover.com

PSG a DOVER company
psgdover.com

PERFORMANCE

GPS1 METAL RUBBER-FITTED

Max. Flow Rate.....60.2 lpm (15.9 gpm)
Max. Inlet Pressure .....8.6 bar (125 psig)
Max. Solids Passage..... 1.6 mm (1/16")
Max. Suction Lift .....5.9 m Dry (19.3')
9.8 m Wet (32.3')

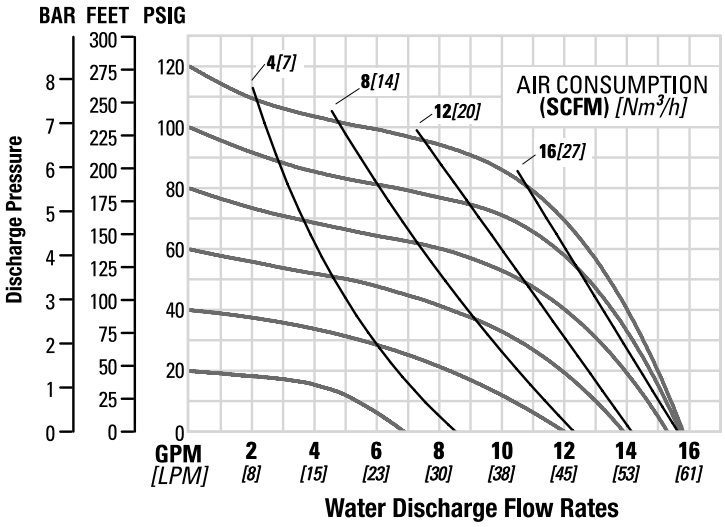

GPS1 METAL PTFE-FITTED
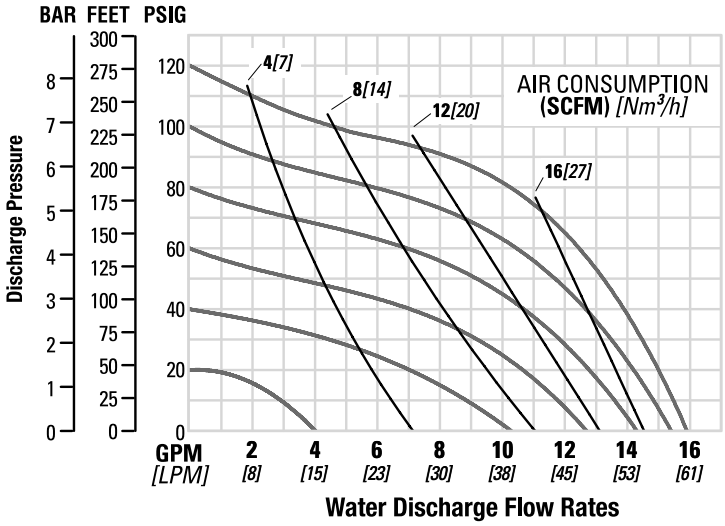
Max. Flow Rate.....60.2 lpm (15.9 gpm)
Max. Inlet Pressure .....8.6 bar (125 psig)
Max. Solids Passage..... 1.6 mm (1/16")
Max. Suction Lift .....4.3 m Dry (14.2')
9.7 m Wet (31.7')