25 mm (1") Pump Maximum Flow Rate: 220 lpm (58 gpm)

P200 PLASTIC

PUMP DATA

Specifications:

Ship Weight.....Polypropylene 10 kg (22 lb)
PVDF 15 kg 32 lb)
PFA 18 kg (40 lb)
Air Inlet.....6 mm (1/4")
Liquid Inlet..... 25 mm (1")
Liquid Outlet..... 25 mm (1")

DIMENSIONAL DRAWING

P200 Plastic

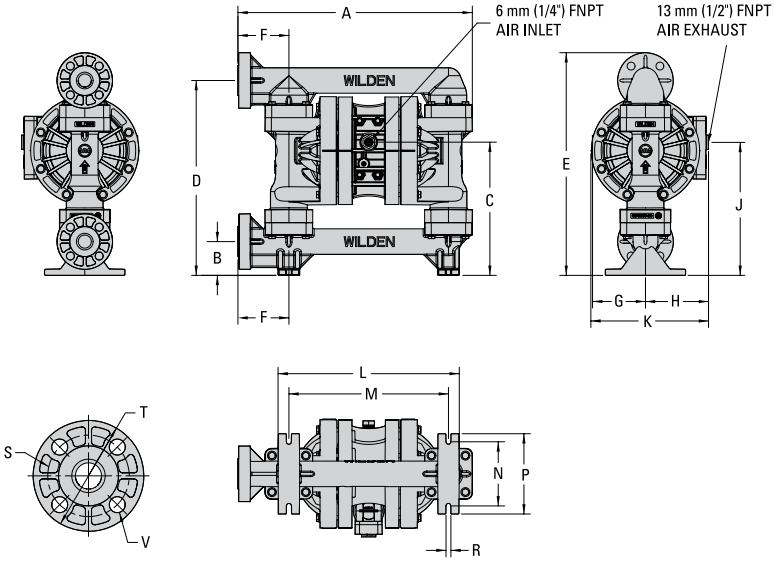

DIMENSIONS

ITEM	METRIC (mm)	STANDARD (inch)
A	457	18.0
B	66	2.6
C	259	10.2
D	381	15.0
E	434	17.1
F	99	3.9
G	104	4.1
H	122	4.8
J	259	10.2
K	231	9.1
L	353	13.9
M	310	12.2
N	124	4.9
P	157	6.2
R	10	0.4
DIN FLANGE		
S	85 DIA.	3.3 DIA.
T	115 DIA.	4.5 DIA.
U	14 DIA.	0.6 DIA.
ANSI FLANGE		
S	79 DIA.	3.1 DIA.
T	108 DIA.	4.3 DIA.
U	16 DIA.	0.6 DIA.

WILDEN®
22069 Van Buren Street
Grand Terrace, CA 92313-5607 USA
O: +1 (909) 422-1730 F: +1 (909) 783-3440
www.wildenpump.com

PERFORMANCE

P200 PLASTIC RUBBER-FITTED

Max. Flow Rate..... 220 lpm (58 gpm)
Max. Size Solids.....4.76 mm (3/16")
Max. Suction Lift..... 3.6 m Dry (11.9')
9.1 m Wet (30.0')

CAUTION: Do not exceed 5.2 bar (75 psig) air supply pressure on PFA pumps.

CAUTION: Do not exceed 8.6 bar (125 psig) air supply pressure on polypropylene and PVDF pumps.

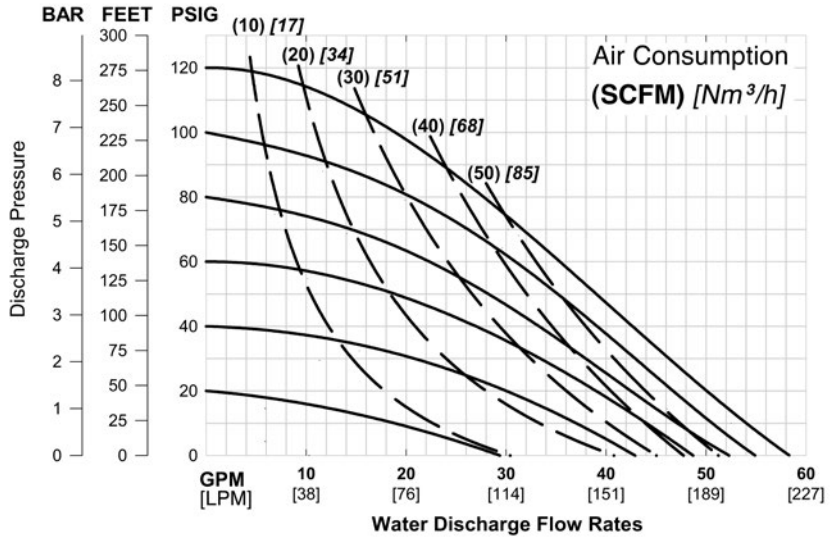

Click button to view Performance Curve → RUBBER-FITTED | TPE-FITTED

P200 PLASTIC REDUCED-STROKE PTFE-FITTED

Max. Flow Rate..... 174 lpm (46 gpm)
Max. Size Solids.....4.76 mm (3/16")
Max. Suction Lift..... 2.4 m Dry (7.9')
9.4 m Wet (31.0')

CAUTION: Do not exceed 5.2 bar (75 psig) air supply pressure on PFA pumps.

CAUTION: Do not exceed 8.6 bar (125 psig) air supply pressure on polypropylene and PVDF pumps.

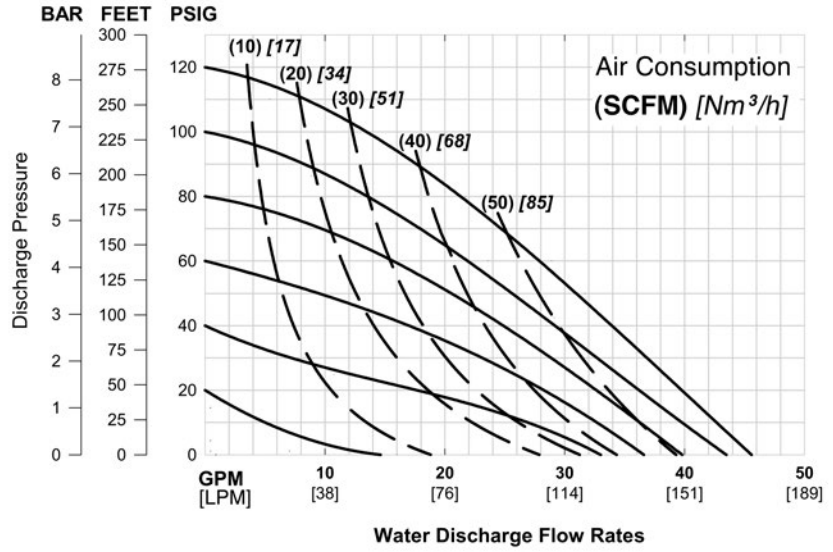

Click button to view Performance Curve → REDUCED-STROKE PTFE-FITTED | FULL-STROKE PTFE-FITTED

WILDEN®
22069 Van Buren Street
Grand Terrace, CA 92313-5607 USA
O: +1 (909) 422-1730 F: +1 (909) 783-3440
www.wildenpump.com